620. Report on education in the central provinces for the year 1890-91. Nagpur 1891. VII 79

REPORT

ON

EDUCATION

IN THE

CENTRAL PROVINCES,

FOR

THE YEAR 1890-91.

VII/
79

NAG

PEE.]

VII

BY ORDER OF THE LIEUT. GOVERNOR OF BENGAL * FORWARDED

No. $\frac{7171\text{-A}}{659}$

Extract from the Proceedings of the Chief Commissioner, Central Provinces, in the General Department,—dated Pachmarhi, the 12th October 1891.

READ—Letter from the Inspector-General of Education, No. D-2120, dated the 10th July 1891, being a report on the state and progress of Education in the Central Provinces for the year 1890-91.

READ ALSO—the District Reports.

BENGAL SECRET * LIBRARY

RESOLUTION.

The statistical summary for the 5 years 1886-87 to 1890-91 given in paragraph 3 of the Report shows that while the number of schools has declined during that period from 1,891 to 1,845, the number of pupils has increased from 1,06,952 to 1,11,498, the average attendance from 74,180 to 74,381, and fee receipts from Rs. 58,007 to Rs. 79,344. There has been a steady annual rise in the fee income, and a further material increase may be expected during the current year, as a revised table of fees came into force on the 1st April last, providing for a considerable enhancement of the fees charged in English schools and a moderate enhancement of the rates charged for Vernacular education. Colleges, Secondary schools and Primary schools, all return a larger income from fees during the year under report than in the preceding year.

2. It has been the policy of the Administration during the past three years to endeavour to give a more practical and modern turn to the studies in Middle and Primary schools, and to pay increased attention in accordance with the wishes of the Government of India to discipline and moral training. In paragraph 4 of his present report the Inspector-General refers to what has been done during the past year in furtherance of this policy, and the Chief Commissioner is glad to recognize that, under Mr. Munro's guidance, much progress has been and is being made in the direction of a more practical scheme of Education and a better system of discipline and school training.

As regards discipline and moral training, it was noticed in last year's report that in order to improve the efficiency and tone of our Secondary schools a class had been opened* at Nagpur for training teachers for schools of that class, that inter-school rules had been introduced and that the monitorial system had been tried experimentally in the Jubbulpore College. The monitorial system has now been extended, the use of conduct cards has been introduced into all schools, much attention is paid to physical training, and considerable advantage both to masters and pupils is believed to be derived from the system of annual Teachers' conferences, where the teachers meet and exchange ideas, and the pupils take [illegible] in athletic contests. The important part which the supply of qualified [illegible] must play in the Edu[illegible] ceived practical recognition [illegible] e charge of the Training [illegible] reported that the training [illegible] since this officer's arrival. [illegible] raining school for female

* [illegible] training of Village School-masters.

3. Next as regards the course of studies in Middle and Primary schools. Drawing now occupies a prominent position in the Educational programme and is very popular. Encouragement is given to masters to qualify in drawing and progress has been made in meeting the demand for competent Drawing masters. Steps have also been taken to provide in the Normal schools for the instruction of masters in the Kindergarten system and in a system of manual or "hand and eye" training which is described as based on drawing and is understood to follow the lines adopted by the London School Board. So far as the Chief Commissioner has been able to gather, this "manual training" is not appreciated by the children's parents : but it is too soon yet to form a decisive judgment on the point. This much, however, may be safely said that in endeavouring to adopt these systems to our Educational Scheme, it is essential that measures should be taken to secure on the part of those who are to impart instruction through them some knowledge of the principles on which they are based, the ends at which they aim, and also practical familiarity with the method of teaching them. Otherwise they can never be taught intelligently and will inevitably degenerate into mere mechanical exercises, having little or no educational value. Trained teachers are the first want, and in the Chief Commissioner's opinion the development of our educational arrangements on the lines in question should not run in advance of the supply of such teachers. The Kindergarten system is reported to be well taught now in the Normal schools.

4. One or two other points connected with the revised curricula may be briefly noticed. The teaching of Elementary science (common objects in the lowest classes and the elements of Physical science in the higher) is being extended, and the subject of sanitation has been tentatively introduced, as an occasional lesson, into the curriculum. The Agricultural Primer is taught in most rural schools, and in order that the instruction on this subject may be intelligent and real, which it cannot be unless the masters themselves understand it, arrangements have now been made to send a certain number of Primary teachers annually to the Agricultural class at Nagpur to be put through a course of school and field instruction in the text-book.

5. The total expenditure on Education in the year under report was Rs. 8,80,426, of which Rs. 5,14,242 were met from local sources and Rs. 3,66,184 from Provincial revenues. The expenditure in the previous year was Rs. 8,01,992, of which Rs. 4,50,958 were met from local sources. There has been an increase of Rs. 63,284 in the expenditure from local sources and of Rs. 15,150 in the Provincial charges, the increase in both cases being chiefly due to larger expenditure on buildings.

The increased income from fees has been already referred to. Local rates and cesses contributed Rs. 1,61,714 against Rs. 1,46,802 in the previous year, and Municipal Funds Rs. 69,977 against Rs. 66,109 in that year. In the case of the former, the increase is due to the revision of Settlements now in progr

Of a total *direct* expend 44,954, or 7
spent on College education ;
and Rs. 3,61,328, or 57·7
expenditure from Prov
Rs. 2,23,205 in the preced
spent on Colleges ; Rs. 74,6
Rs. 1,26,711, or 57·8 per cen

6. The results of the various examinations for which students from the Central Provinces appeared are given in paragraph 17 of the Report. There were 4 LL. B. passes against 1 in the previous year, but this and the Upper Primary examination are the only examinations in which students were as successful as in that year. Upper Primary passes rose from 7,026 to 7,202, but F. A. passes declined from 46 to 39; Matriculation passes from 120 to 103; Middle school passes from 565 to 544; and Lower Primary passes from 10,014 to 9,917. No reason for this general falling off is offered by the Inspector-General, and the Chief Commissioner trusts it is only temporary. The rules relating to the Upper Primary examination have been recently revised and enlarged in the manner described at page 5 of the Report, and the revision of the rules for the Middle School examination is now under consideration. The new rules will in both cases come into force in 1892. It is noticeable that during the past three years no degrees have been taken in Medicine. Arts and Law appear to be the favourite courses of study, and the Chief Commissioner proposes to modify the existing Scholarship rules so as to hold out greater encouragement to the study of Medicine and Engineering.

The number of School of Art passes was 9 in 1886-87, 21 in 1887-88, 41 in 1888-89, 53 in 1889-90 and 32 in 1890-91. These figures indicate that considerable progress has been made in the teaching of Drawing, though the results for 1890-91—partly attributed to greater strictness in the examination—are unfavourable. The Chief Commissioner observes that the results of this examination as regards candidates from the Government schools at Jubbulpore, Raipur and Sambalpur, were in all three cases unsatisfactory, and, apart for the failures due to stricter examination, this would seem to show either that the teaching is still defective or that teaching is wasted on those who have no natural aptitude for Drawing and who would be better engaged on some other form of study.

7. Details of the working of the 3 Colleges—the Government College at Jubbulpore and the Hislop and Morris Aided Colleges at Nagpur—are given in paragraphs 45 to 48 of the Report. The number of students on the rolls has risen from 152 to 212 and the average attendance from 130 to 172. The total expenditure amounted to Rs. 44,954 against Rs. 45,495 in the preceding year. It is unsatisfactory to find it reported that although the Jubbulpore College has been supplied with a special instructor in drill and gymnastics, physical training has been neglected. The Inspector-General should take steps to remedy this. Nothing in the direction of physical training has yet been accomplished in either of the Aided Colleges, and this is to be regretted. The authorities of the Hislop College appear, however, to be alive to the importance of associating physical training with intellectual pursuits.

8. Certain Primary schools having been raised to the Middle standard, Secondary schools have increased in number from 241, with a roll of 21,808, to 253, with a roll of 23,874. The expenditure on Secondary education amounted to Rs. 2,20,015 against Rs. 2,04,962 in the preceding year. High school education is, substantially, in the same position as last year, but a new High school will soon be established at Hoshangabad, a sum of upwards of Rs. 20,000 having been raised locally for the purpose of building a suitable school-house and of meeting a portion of the annual cost of maintenance. The question of equipping the Sambalpur High school with an efficient staff, to which reference is made in paragraph 53 of the Report, should be separately dealt with by the

Inspector-General. The chief need of our Secondary schools is a supply of qualified teachers. The class for secondary teachers at Nagpur (paragraph 2 of this Resolution) was established in order to meet this want, and it is satisfactory to find it reported that the influence of this class is distinctly visible in improved methods and more intelligent teaching in such schools as have been supplied with teachers trained in it.

9. The expenditure on Primary education (boys) was Rs. 2,70,774 against Rs. 2,58,722 in the preceding year, the number of schools (1,430) being one in excess of that year, with an increase on the rolls of 954, or about 1 per cent. Most of the Primary schools are under the management of local bodies, and these bodies have now been entrusted with the administration of grants-in-aid to aided primary schools. The educational work of District Councils and Local Boards is summarized in paragraphs 26 to 42 of the Report, and as the progress of Primary education depends very largely on the interest taken by these local bodies in the schools committed to their charge, the Chief Commissioner regrets to find that their work has not in all cases been satisfactory. The District Council and Local Boards which appear to have done best are those of Chanda, Chhindwara, Bhandara, Raipur, Seoni, Betul and Damoh.

The tone and discipline in Primary schools is described by the Inspector-General as generally good, and drill and gymnastics and native games are reported to receive attention in the schools of every district except perhaps Nagpur. In connection with the remarks already made in regard to the revision of the Curriculum and the policy of suiting the education of the rural population to the requirements of their daily life, it is interesting to find from the table at paragraph 60 of the Report that of 765 candidates for the Middle school examination, 577 took up Drawing, 490 Elementary Science, and 536 Agriculture. The same table shows that 330 passed in Sanitation.

10. At the Normal schools 138 students obtained certificates as compared with 128 in the previous year. Certificates were obtained by 25 students in the class for Secondary teachers at Nagpur. In the Jubbulpore Male Normal school alone were the results of the examinations for certificates less satisfactory than in the preceding year. At Raipur 33 certificates were obtained against 11 in that year. The Agricultural and Engineering classes at Nagpur have done useful work, and the Law classes at Jubbulpore and Nagpur attract a considerable number of students.

11. The number of schools for girls has increased from 132, with 5,579 pupils, to 135, with 5,799 pupils. Here, as in other branches of the Department, the chief need is an adequate supply of trained mistresses, especially of mistresses for the Marathi schools. The Zenana agencies continue to render valuable assistance in the cause of female education.

12. The number of schools for Europeans and Eurasians is 12, with an average roll of 961 against 914 in the previous year. The monthly grants-in-aid, aggregating Rs. 1,565 per mensem or Rs. 18,780 for the year, remained unaltered, having been fixed for 4 years. Four pupils matriculated from the St. Francis deSales' school, Nagpur, and 2 from the Bishop's school, Nagpur. The number of Middle school passes was 19 against 23 in the preceding year. The reports regarding these schools are generally satisfactory.

13. The cordial acknowledgments of the Chief Commissioner are due to the Societies and gentlemen whose services in their official or private capacities have been brought to his notice by the Inspector-General in Section X of the Report. He desires to notice the good work of the three Inspectors of Schools, Mr. Thompson, Mr. Elliott, and Mr. Mitchell. His special thanks are also due to the Inspector-General, Mr. Monro, for his zeal in endeavouring to improve the working of the Department under his control and for his many valuable suggestions.

ORDER.—Ordered, that a copy of this Resolution (with the usual number of spare copies) be submitted to the Government of India in the Home Department, and that a copy be forwarded to the Inspector-General of Education for information and guidance; also that it be published in the Supplement to the *Central Provinces Gazette*, and that copies, bound with the Report, be distributed as usual.

[True Extract.]
F. C. ANDERSON,
Secretary.

Secretariat Press, Nagpur;—20-10-91—250

INDEX to the Report on Education in the Central Provinces for the year 1890-91.

Section.	Subject.	Para.
	Submits the Report	1
I.	*General and Statistical Summary.*	
	Number of schools and scholars	2
	Statistics for the past five years	3
	Features of the year's operations	4
	Increase and decrease of schools and scholars by districts ...	5
	Percentage of school-going-age population under instruction in each District	6
	Distribution of pupils according to caste or race	7
	Classification of pupils according to the wealth and occupation of parents...	8
	Languages studied	9
	Expenditure on Education according to Departmental returns ...	10
	Sources of expenditure	11
	Distribution of the expenditure amongst the different classes of institutions.	12
	Cost of educating each pupil	13
	Expenditure on school buildings	14
	Fee receipts	15
	Statement of receipts and charges furnished by the Comptroller ..	16
	Results of Examinations	17
	Physical training	18
II.	*Controlling Agencies.*	
	Inspector-General of Education	19
	Work of Inspectors of Schools	20
	Mr. Thompson	21
	Mr. Elliott	22
	Mr. Mitchell	23
	Work of Deputy Inspectors	24
	Extra Departmental Controlling Agencies	25
	Jubbulpore	26
	Damoh	27
	Saugor	28
	Narsinghpur	29
	Hoshangabad	30
	Nimar	31
	Nagpur	32
	Chanda	33
	Wardha	34
	Bhandara	35
	Betul	36
	Balaghat	37
	Chhindwara	38
	Seoni	39
	Bilaspur	40
	Sambalpur	41
	Raipur	42
	Tahsildars	43
	School Committees	44
III.	*University Education.*	
	College statistics	45
	Jubbulpore College	46
	Hislop College	47
	Morris College	48

Section.	Subject.	Para.
IV.	*School Education—General.*	
	A.—Secondary Schools.	
	Statistics of Secondary schools	49
	High school attached to the Jubbulpore College	50
	Saugor High school	51
	Raipur High school	52
	Sambalpur High school	53
	High school attached to the Hislop College Nagpur	54
	City Aided High school, Nagpur	55
	Christ Church Mission High school, Jubbulpore	56
	Mission High school, Seoni (Chhapara)	57
	Middle schools	58
	B.—Primary Education.	
	Primary Education	59
	Middle Scholarship Examination	60
	Results of the Examination for prizes in Agriculture and Physical Science.	61
	Native States	62
V	*School Education—Special.*	
	Training schools for Teachers	63
	Nagpur Training Institution	64
	Jubbulpore Normal school	65
	Raipur Normal school	66
	Sambalpur	67
	Female Normal school, Jubbulpore...	68
	Agricultural Class, Nagpur	69
	The Engineering Class	70
	Law Class, Jubbulpore	71
	Law Class, Morris College	72
	Carpentry Classes	73
VI.	*Female Education.*	
	Comparative statement of girls' schools	74
	Jubbulpore Zenana Mission	75
	Nagpur Zenana Mission	76
	Other Zenana Agencies	77
VII A.	*Europeans and Eurasians.*	
	Schools for Europeans and Eurasians	78
	St. Francis DeSales' school, Nagpur	79
	Bishop's school, Nagpur	80
	St. Aloysius school, Jubbulpore	81
	Christ Church school for boys, Jubbulpore	82
	Convent school, Kamptee	83
	Convent school, Nagpur	84
	The Convent school, Jubbulpore	85
	Christ Church school for girls, Jubbulpore	86
	The Orphanage, Kamptee	87
	The Railway school, Khandwa	88
	The Railway school, Dongargarh	89
	Railway school, Harda	90

Section.	Subject.	Para.
VIIB.	*Mahomedans and Aboriginal Races.*	
	Schools for Mahomedans and Aboriginal races	91
VIIC.	*Native Chiefs.*	
	The Rajkumar College, Jubbulpore...	92
VIII.	*The Book Depôt and Press.*	
	Book Depôt purchase, sale and stock	93
	Book Depôt Accounts	94
	Books printed in non-Departmental Presses	95
	Lithographic Press work	96
	New Vernacular books bought for school Libraries and Prize distribution	97
IX.	*Museums, Literary Societies and the Press.*	
	Museums	98
	The Press	99
	Libraries and Literary or Philanthropic Societies	100
X.	*Societies and Individuals that deserve notice.*	
	Societies	101
	Revenue Officers	102
	District Councils	103
	Private persons and Local Board Members	104
	Inspectors of Schools and Deputy Inspectors of Schools .	105
	Principals and Professors of Colleges	106
	Superintendents and Teachers in schools	107

BENGAL SECRETARIAT LIBRARY

No. $\frac{D}{2120}$

FROM

ALEXANDER MONRO, ESQ.,

INSPECTOR-GENERAL OF EDUCATION,

Central Provinces,

To

THE SECRETARY TO THE CHIEF COMMISSIONER,

Central Provinces.

Dated Nagpur, the 10*th July* 1891.

SIR,

I have the honour to submit the annual Report on the state and progress of Education in the Central Provinces for the official year 1890-91.

SECTION I.—GENERAL AND STATISTICAL SUMMARY.

Number of schools and scholars.

2. The year under review shows a small increase in the number of schools, but a considerable increase in the number of scholars, over the figures of the previous year. From the subjoined table it will be seen that the number of schools rose from 1,830 to 1,845, and the number of scholars from 108,200 to 111,498. There has thus been an increase of 15 in schools, and 3,298 in scholars. This may be regarded as satisfactory, considering the facts that cholera prevailed in some districts and that the schools were closed for six weeks for Census operations. Colleges remain the same, but there has been an increase of 60 in pupils. High Schools show little variation, except that there is one school less, which is due to the fact that there was no Upper Secondary department in the Bishop's School, Nagpur, during the year under report. The strength of English Middle schools has increased by 484 pupils. The number of Vernacular Middle schools has risen from 165 to 178 and the strength from 17,122 to 18,686, which is accounted for mainly by the raising of 13 Upper Primary schools to the status of Middle schools. Primary English schools show an increase of 5 in schools and 342 in pupils. In Primary Vernacular schools there is a decrease of 4 in schools, but an increase of 612 in pupils. Under special schools for males, there is a decrease of one school, owing to the closure of the Jubbulpore Night Drawing school. English Secondary schools for females exhibit an increase of one school, one of the Primary schools for Europeans having been raised to the status of a Middle school. The decrease under Primary Vernacular Girls' schools is nominal, being due to the fact that 7 English Primary schools for Europeans, with 420 pupils,

were included under this head in last year's returns, whereas in the returns of the year under review they are shown separately:—

Class of Institution.			1889-90. Schools.	1889-90. Pupils	1889-90. Average number of pupils per school.	1890-91. Schools	1890-91. Pupils	1890-91. Average number of pupils per school.
University...	Colleges ...	...	3	152	51	3	212	71
Secondary.	High-schools	...	11	600	55	10	618	62
	Middle schools	English ...	65	4,086	63	65	4,570	70
		Vernacular...	165	17,122	104	178	18,686	105
Primary ...	Primary English	...	63	2,459	39	68	2,801	41
	Upper and Lower Primary Vernacular	..	1,366	77,464	58	1,362	78,076	57
Special ...	English and Vernacular schools for males	...	25	738	29	24	736	30
	Vernacular schools for females		1	20	20	1	19	19
Female ...	Secondary schools ...	English ...	4	101	25	5	105	21
		Vernacular.	2	179	89	2	133	66
	Primary schools ...	English .	...	...	...	6	368	61
		Vernacular.	125	5,279	42	121	5,174	43
TOTAL PUBLIC INSTITUTIONS ..			1,830	108,200	59	1,845	111,498	60

Statistics for the past five years

3. The statistics for the last five years are given in the following table:—

	1886-87.	1887-88.	1888-89.	1889-90	1890-91
Number of schools ..	1,891	1,892	1,824	1,830	1,845
Number of pupils ...	106,952	108,673	107,357	108,200	111,498
Average attendance ...	74,180	74,930	76,013	72,330	74,381
Fee receipts in all schools ...	58,007	64,589	66,160	74,400	79,344
	Rs. a. p.	Rs. a. p.	Rs. a. p.	Rs. a. p.	Rs. a. p.
Cost per pupil to Government ...	3 6 1	3 6 5	3 4 10	3 5 3	3 6 1

Since the year 1886-87 schools have decreased by 2·4 per cent., whilst scholars have increased by 4·3 per cent., and fee receipts by over 36 per cent. The cost to Government of educating each pupil has increased from Rs. 3-5-3 to Rs. 3-6-1.

4. In last year's report it was stated that the general characteristic of the year's work was the attempt to give a more practical and modern turn to the studies in Middle and Primary schools, and the increased attention paid to discipline and moral training. Our policy in the year under review has been mainly on these lines.

Features of the year's operations.

As regards Technical education :—

(1). Fair progress has been made in our system of manual training. The subject is now well taught in our Normal schools, and, as its ultimate success must necessarily depend upon the gradual supply of Normal students, this may be regarded as a sound foundation. It is also taught in a fair number of ordinary schools. The object of the system is, by a series of simple exercises in wood work, clay modelling, card-board modelling and paper work, to train the faculties to accuracy, dexterity and a sense of proportion, to divert the mind from words to things, to dignify labour and thereby, possibly, to destroy that contempt for manual work so common among the Middle and Upper classes in this country, which paralyses all efforts to give education a more practical bent. The system is based on drawing, every student being required to draw to scale the article he is required to make, and then to construct it from the drawing. Strictly it cannot be regarded as "Technical education," seeing that it makes no attempt to train for any special trade. Our aim is rather to make our boys fit learners of a trade, should they be required to learn trades, when they leave school. It may more accurately be described as "preparatory to technical education."

The Kindergarten system, of which manual training is a development, is also well taught in our Normal schools and in a large number of Primary schools. A text book in the vernacular is much wanted, but this I hope to supply by the end of the year. In order to give the Deputy Inspectors of the Provinces some knowledge of Kindergarten occupations and manual training, they were put through a course of instruction in the subject at Jubbulpore by Mr. Elliott, Inspector of Schools, Northern Circle, in the month of June 1890.

No part of our scheme of technical education has been so successful as drawing. The progress made in drawing during the past year is generally admitted to have been satisfactory. Special drawing masters have been appointed in such Middle schools as were not supplied with proper instruction in the subject. Draft of masters, who showed some aptitude for the subject, were brought in for a course of 3 months' special training in the Normal schools. The Deputy Commissioner of Raipur remarks,—"The aptitude for drawing displayed by "many of the boys struck me as being very remarkable. They quite "look upon it as an amusement as well as a lesson." With the object of encouraging masters to qualify themselves in drawing, I have adopted the system in the English Educational Code, of allowing such of them as pass the Bombay School of Art to add the letter D to their names. An exhibition of drawings, paintings, modelling in wood, clay, and card-board and paper work, the handiwork of masters and students in the Central Provinces, was held in Jubbulpore at the end of March last. The exhibits were generally good, and in some cases

excellent. A sum of Rs. 2,000 was subscribed for prizes. It is hoped that the exhibition will prove a stimulus to future good work, by offering a standard of excellence.

(2). The progress of instruction in Physical science continues. The itinerant Science instructors have now nearly finished their course of lectures, at selected centres. A test examination was held at each centre. The masters of all English schools and a large number of the masters of Vernacular schools have, thus, had an opportunity of qualifying themselves in science. Science apparatus has been supplied to all the High schools and most of the important Middle schools.

(3). Object lessons continue to receive attention. The great desideratum is a good text book in the vernacular, but this is being prepared.

(4). The study of Agriculture has received increased attention during the year. The subject was taught in most of our rural schools. It was, however, pointed out that the teaching of agriculture by school masters from a text book of which they were ignorant could be of very little value. It was also observed that, if scientific instruction in agriculture, with the view of encouraging more approved methods, was ever to be introduced into this country, this object could only be effected by reaching the ryot through the primary schoolmaster. It was, accordingly, resolved to train, annually, a certain number of primary schoolmasters in the Agricultural class, Nagpur. The course of training is to extend over 6 months, and is to embrace instruction in the text book in use in our schools, *viz.*, Mr. Fuller's Agricultural Primer. Mr. Fuller has kindly drawn up a syllabus of studies, *vide* Appendix A. With the object of enabling the schoolmasters to supplement theory by practical illustration, school gardens have been opened in every school, wherever possible. Mr. Fuller has, also, drawn up a scheme, *vide* Appendix B.

(5) The Engineering class has been successfully conducted during the year. In the final examination of the class, out of 9 candidates examined, 4 passed as Sub-overseers and 4 as Sub-surveyors. All the successful candidates obtained employment.

(6). The Curriculum of studies for public schools has been revised, with reference to subjects of a technical character, *vide* Appendix C.

As regards discipline and moral training :—

(1). Mr. R. McGavin Spence, M. A., who had been selected by the Secretary of State for the post of Superintendent of the Nagpur Training Institution, entered upon his duties in August last. The training of teachers for Secondary schools has much improved under his charge.

(2). The monitorial system, which had been tried as an experiment in the boarding house attached to the Jubbulpore College, has been introduced into the other boarding houses of the Provinces.

(3). The system of conduct cards, adverted to in last year's report, has been introduced into all schools.

(4). Much attention has been paid to physical training.

(5). Teachers' conferences, for instruction in the new subjects of study, and for discussion of educational matters, have been held in every district. Native school sports took place at each conference. As remarked by Mr. Thompson, "these conferences supply masters with "new and useful information. Their feebleness and mental stagnation "are rubbed down by contact with men of different characters and "acquirements, self-culture is stimulated and a healthy rivalry produced. "The emulation in sports amongst the boys, the imitation of exercises "and excellences foreign to their own schools, the knowledge of the "world gained by a visit to a centre of population or trade, reacts on "the schools, when the masters and boys return to their own villages."

The other important administrative changes are summarized below :—

(1). A scheme for stimulating education by linking the Departmental examinations with the conditions of admission to the Public Service, has been sanctioned, *vide* Appendix D.

The Upper Primary examination has been made the condition of admission to appointments carrying a salary of less than Rs. 15. For appointments under Rs. 30, the Middle School examination, and for appointments above Rs. 30, the Matriculation and higher University examinations are the tests.

(2). The Upper Primary examination having been made the test for admission into the lower grades of the Public Service, it was found necessary to revise and reconstitute it. The opportunity was, at the same time, taken of making it the test for certain other examinations, which had, formely, been held separately, thereby economizing time and labour. A copy of the scheme is appended, *vide* Appendix E.

The objects of the examination, as reconstituted, are to regulate promotion into a Vernacular Middle school and the 1st English class of an Anglo-Vernacular school, to test the fitness of candidates for admission into the lower grades of the Public Service, to regulate the award of Middle School scholarships, and generally to promote primary education. Middle School scholarships and certain prizes in Agriculture and Physical science, which had hitherto been awarded on the results of separate examinations, are now determined by the Upper Primary examination. The examination is to be conducted by a Chairman and a Board of Examiners, at fixed centres in each district. The most important change consists in the fact that the examination has been made the condition of admission into the 1st English class of an Anglo-Vernacular school. Hitherto, students gained admission to that class from the 3rd Vernacular class. They have, now, to pass through the 4th Vernacular class before admission to the 1st English class, the result being that the Vernacular course is prolonged from 3 to 4 years. This arrangement is in accordance with the recommendation of the Education Commission, *viz.*, that students should be well grounded in the vernacular before commencing the study of English.

(3). An examination for Deputy Inspectors in languages and in the nature of their duties has been prescribed. Special rewards have been

offered for a pass in the languages of the indigenous tribes, *viz.*, the Gonds, Khonds and others, *vide* Appendix F.

(4). The fee rules have been revised, *vide* Appendix G. The fees chargeable in English schools have been considerably enhanced, whilst the rates for vernacular education have been slightly raised.

(5). Negotiations are proceeding for handing over to Municipalities the control of all Government schools within their limits. District Councils are to receive charge of all results aided schools, which had hitherto been under Departmental control.

(6). A High school has been sanctioned in Hoshangabad. Upwards of Rs. 25,000 were raised by private subscriptions to meet the cost of a new building for the school.

Increase and decrease of schools and scholars by districts

5. The following table shows the increase and decrease of schools and scholars by districts :—

	Districts	Area in square miles	Population	1889-90		1890-91		Increase		Decrease.	
				Schools	Pupils	Schools	Pupils	Schools	Pupils	Schools	Pupils
Northern Circle.	Jubbulpore .	3,918	749,362	155	9,241	158	9,805	3	564	..	...
	Saugor ..	4,005	591,486	97	5,976	94	5,959	...	...	3	17
	Damoh ...	2,799	325,336	66	3,292	66	3,262	..	...	.	30
	Mandla ...	4,719	339,487	43	1,697	42	1,767	...	70	1	...
	Hoshangabad ...	4,437	528,103	95	5,042	99	5,363	4	321	...	...
	Makrai Feudatory State ...	215	18,547	...	...	3	50	3	50	...	...
	Narsinghpur ...	1,916	366,391	97	6,046	96	6,062	..	16	1	...
	Nimar ..	3,340	253,499	89	4,370	92	4,534	3	164	...	...
Southern Circle	Nagpur ...	3,786	756,911	211	12,830	203	12,394	..	...	8	436
	Chhindwara ...	3,915	407,632	38	2,249	37	2,181	...	...	1	68
	Seoni ...	3,247	370,832	50	2,622	50	2,564	...	...	...	58
	Betul ..	3,905	322,931	56	2,622	59	2,758	3	136	...	...
	Chanda ...	10,785	697,863	91	5,346	91	5,495	...	149	...	...
	Wardha .	2,401	400,832	104	5,430	96	5,296		...	8	134
	Balaghat ..	3,146	383,993	50	2,571	49	2,597	...	26	1	...
	Bhandara ...	3,922	742,887	119	7,733	122	7,630	?	...	..	103
Eastern Circle	Raipur ...	11,885	1,583,938	169	13,020	173	14,364	4	1,344	.	...
	Do. Feudatory States ...	2,658	483,824	16	898	18	1,173	2	275	..	...
	Sambalpur ...	4,521	796,450	111	5,774	130	7,145	19	1,371	...	...
	Do Feudatory States ...	11,897	1,227,093	81	4,992	69	4,207	...	...	12	785
	Bilaspur ...	7,798	1,156,958	80	5,759	79	5,833	...	74	1	...
	Do. Feudatory States	1,002	117,152	12	690	19	1,059	7	369	...	...
	Bastar Feudatory State ...	13,062	310,840	...		..	...	..	...	...	...
Total Government Districts.		84,445	10,774,891	...	...	..	..	...	...	...	...
Total Feudatory States ..		28,834	2,157,456	.	...	.	...		.	.	...
GRAND TOTAL ..		113,279	12,932,347	1,830	108,200	1,845	111,498	15	3,298	...	...

The schools in the Northern Circle exhibit a net increase of 8 schools and 1,138 scholars. In the Southern Circle there has been a decrease of 12 schools and 488 scholars. The largest decrease (8 schools and 436 scholars) is in the Nagpur District. The largest increase is in the Eastern Circle, comprising the districts forming the Chhattisgarh Division, *viz.*, 19 schools and 2,648 scholars.

Percentage of school-going age population under instruction in each district.

6. The percentage of the school-going age population under instruction in each district, calculated at 15 per cent. of the total population, is exhibited in the following table:—

District.	Children of school-going age.	Number of children under instruction.	Percentage.
Jubbulpore	112,404	9,805	8·72
Saugor	88,722	5,959	6·71
Damoh	48,800	3,262	6·68
Mandla	50,923	1,767	3·46
Hoshangabad	79,215	5,368	6·79
Makrai Feudatory State ...	2,782	50	1·80
Narsinghpur	54,958	6,062	11·03
Nimar	38,024	4,534	11·92
Nagpur	113,536	12,394	10·91
Chhindwara	61,144	2,181	3·56
Seoni	55,624	2,564	4·60
Betul	48,439	2,758	5·69
Chanda and Sironcha ...	104,679	5,495	5·24
Wardha	60,124	5,296	8·80
Balaghat	57,598	2,597	4·50
Bhandara	111,433	7,630	6·84
Raipur	237,590	14,364	6·04
Sambalpur	119,467	7,145	5·98
Bilaspur	173,543	5,833	3·36
Raipur Feudatory Schools ..	72,573	1,173	1·61
Sambalpur do. ...	184,063	4,207	2·28
Bilaspur do. ...	17,572	1,059	6·02
TOTAL ...	1,893,213	111,498	5·88

The total population according to the last Census returns is 12,932,347 as compared with 11,548,511, *viz.*, the figures of the previous census.

The total percentage of pupils of school-going age under instruction is 5·88, or 10·8 per cent. under boys and ·59 per cent. under girls, as compared with 6·35 under both heads, in the year 1880-81, the date of the last census. This would seem to indicate that the progress of education has not kept pace with the increase of population.

Nimar, Narsinghpur and Nagpur head the list, with about 11 per cent. of the school-going age population under instruction. Education in the Feudatory States continues to be very backward. This is, in a great measure, due to the fact that most of the States are not provided with an adequate inspecting agency. The Inspector of Schools, Eastern Circle, reports that 59 schools and 2,892 pupils, in 6 Feudatory States, have not been included in the Annual Returns, because they are not under regular inspection. I intend to take up the whole question of education in the Feudatory States, this year.

7. In the accompanying table the number of pupils under instruction according to race or caste, is shown :—

Distribution of pupils according to caste or race.

	Races.	Colleges.	Secondary schools	Primary schools	Technical schools.	Total.
	1	2	3	4	5	6
Males ...	Native Christians ...	...	212	331	1	544
	Hindus ..	192	20,590	70,059	676	91,517
	Mahomedans ...	13	2,376	6,041	49	8,479
	Jains ...	...	103	248	1	352
	Parsis ...	3	11	15	4	33
	Gonds and other aboriginal tribes.	...	192	1,494	2	1,688
	Others ...	1	236	2,342	1	2,580
	Total ...	209	23,720	80,530	734	105,193
Females ...	Native Christians ..	...	7	264	1	272
	Hindus ...	...	124	4,520	18	4,662
	Mahomedans ...	...	5	310	...	315
	Jains ...	...	...	42	...	42
	Parsis ..	...	...	2	...	2
	Gonds and other aboriginal tribes...	...	...	7	..	7
	Others ...	...	...	34	...	34
	Total ...	...	136	5,179	19	5,334
	GRAND TOTAL ...	209	23,856	85,709	753	110,527

N. B.—Europeans and Eurasians are not shown in this return.

Particulars regarding the number under each caste or race, in the current year, are not yet obtainable from the Census office. I am, therefore, unable to compare the percentage of the population of school-going age under instruction, according to caste or race. The number of Native Christian boys attending school has increased from 456 to 544, of Hindus from 88,855 to 91,517 or by nearly 3 per cent., and of Mahomedans from 8,337 to 8,479 or by 1·6 per cent. Last year the percentage of Hindu boys of school-going age under instruction was 16, and of Mahomedans 39·5. The number of boys of the Gond and other aboriginal tribes under instruction shows a slight increase, *viz.*, from 1,654 to 1,688. Last year the percentage of boys of Gonds and other aborigines of school-going age under instruction was 1·08. The number of Native Christian girls under instruction has declined from 297 to 272. Under Hindus the number of girls attending school has increased from 4,319 to 4,662, whilst under Mahomedans the figures have declined from 329 to 315. The percentage in the previous year of Hindu and Mahomedan girls of school-going age under instruction was as follows :—

Hindus	...	·79
Mahomedans	...	1·6

Classification of pupils according to the wealth and occupation of parents.

8. The subjoined table gives particulars of pupils classified according to the wealth and occupation of their parents or guardians :—

			1889-90.	1890-91.	Remarks.
Richer classes		...	470	660	
Middle classes...	Government Service	...	3,217	3,139	
	Private Service	..	2,574	2,767	
	Estates	...	4,789	4,714	
	Professions	...	3,128	4,015	
	Trades	...	4,118	4,136	
Poorer classes...	Government Service	...	11,609	12,790	
	Agriculture	...	37,767	37,904	
	Trades	...	12,735	12,525	
	Skilled labour	...	8,100	8,393	
	Common labour	...	11,138	11,117	
	Miscellaneous	...	8,555	9,338	
	Total	..	108,200	111,498	

There is an increase of 38 per cent. in the number of the richer classes, which is accounted for by the larger attendance at the Colleges and English Secondary schools, to which the richer classes generally resort. The middle classes, *viz.*, those whose income ranges between Rs. 5,000 and Rs. 200 per annum, furnish a little over 16 per cent. of the number under instruction, *viz*, the same percentage as in the previous year.

The poorer classes, *viz.*, those whose income falls below Rs. 200 per annum are represented by 82·5 per cent. as against over 83 per cent, last year. Government servants furnish over 14 per cent, *viz.*, the same percentage as last year, agriculturists nearly 34 per cent, as compared with 38 per cent. last year. There is a small increase in the number of artizans attending school, which is encouraging, considering their importance to the community.

Languages studied.

9. The distribution of pupils according to languages studied is shown below :—

	Number of scholars in the Central Provinces.		1889-90.															1890-91.													
					Classical.					Vernacular.										Classical.					Vernacular.						
	1889-90.	1890-91.	Number of schools.	English.	Latin.	Sanskrit.	Arabic.	Persian.	French.	Hindi.	Marathi.	Urdu.	Tamil.	Telugu.	Uriya.	Gujrathi.	Bengali.	Number of schools	English.	Latin.	Sanskrit.	Arabic.	Persian.	French.	Hindi.	Marathi.	Urdu.	Tamil.	Telugu.	Uriya.	Gujrathi.	Bengali.
Hindus ...	93,174	96,179																													
Mahomedans ..	8,666	8,794																													
Native Christians.	753	816																													
Jains ...	346	394																													
Parsis ...	28	35	1,830	8,388	123	873	70	345	89	62,815	30,267	3,471	429	399	9,129	185	51	1,845	8,842	114	916	18	335	60	64,783	30,271	3,310	202	619	10,073	379	54
Gonds, Mahars, Dhers.	1,654	1,695																													
Other low castes.	2,562	2,614																													
Europe[illegible] and Eurasi[illegible].	1,017	971																													
	108,200	111,498																													

The number of pupils studying English has increased from 8,388 to 8,842. Sanskrit is studied by 916 pupils, against 873. As regards the 3 great vernaculars of the Central Provinces, the number of Hindi learners has increased by 2,468, and of Uriya learners by 944, whilst the number of students of Marathi shows little variation. The number of students of Telugu has increased by 35 per cent, which shows that education is making progress in the Sironcha Tahsil.

Expenditure on education according to Departmental returns.

10. The following table shows the expenditure on education according to Departmental returns :—

Colleges and Schools.	1889-90. Total expenditure.	1889-90. Receipts from all local sources.	1889-90. Expenditure from Provincial revenues.	1890-91. Total expenditure.	1890-91. Receipts from all local sources.	1890-91. Expenditure from Provincial revenues.
	Rs.	Rs.	Rs.	Rs.	Rs.	Rs.
Colleges. Government ...	18,985	5,442	13,543	20,043	5,753	14,290
Colleges. Aided ...	26,510	22,712	3,798	24,911	21,439	3,472
Secondary Schools.						
For boys. Government ...	94,752	50,539	44,213	95,118	48,399	46,719
For boys. Local Fund and Municipal ...	49,892	43,212	6,680	57,412	51,093	6,319
For boys. Native States ...	4,115	4,115	...	4,361	4,361	...
For boys. Aided ...	45,538	28,468	17,070	52,452	34,427	18,025
For boys. Unaided ...	2,384	2,384		2,248	2,248	..
For girls. Government ...	605	281	324	625	313	312
For girls. Aided ...	7,676	4,681	2,995	7,799	4,544	3,255
For girls. Unaided ...	..	...	...	...	...	...
Primary Schools.						
For boys. Government ...	50,840	26,814	24,026	48,232	25,500	22,732
For boys. Local Fund and Municipal ...	1,25,990	1,02,967	23,023	1,37,086	1,12,825	24,261
For boys. Native States ...	13,288	13,288	...	14,162	14,162	...
For boys. Aided .	62,545	32,063	30,482	64,099	41,112	22,987
For boys. Unaided ...	6,059	6,059	...	7,195	7,195	..
For girls. Government ...	7,899	2,764	5,135	7,226	2,755	4,471
For girls. Local Fund and Municipal ...	6,201	5,842	359	7,706	6,538	1,168
For girls. Native States ...	418	418	...	452	452	...
For girls. Aided ...	33,324	22,713	10,611	32,245	21,814	10,431
For girls. Unaided ...	288	288	...	151	151	...
Special Schools.						
Training schools for Masters ...	24,888	..	24,888	25,599	...	25,599
Do. do. Mistresses ...	5,542	...	5,542	6,104	...	6,104
Agricultural class ...	2,589	...	2 589	2,159	...	2,159
Practical Engineering class ...	4,258	...	4,258	2,896	...	2,896
Industrial Schools Government ...	2,273	124	2,149	2,076	24	2,052
Industrial Schools Local Fund ...	528	528	...	580	580	...
Law schools ...	4,484	2,964	1,520	3,360	1,509	1,851
Direction ...	27,445	...	27,445	26,268	...	26,268
Inspection ...	74,669	1,480	73,189	81,858	1,857	80,001
Scholarships ...	28,460	10,363	18,097	26,644	13,166	13,478
Buildings ...	23,307	17,466	5,841	79,552	56,154	23,398
Furniture ...	7,189	4,452	2,737	8,820	5,071	3,449
Miscellaneous including the Book Depôt ...	39,051	38,531	520	30,987	30,800	187
Total ...	8,01,992	4,50,958	3,51,034	8,80,426	5,14,242	3,66,184

The total expenditure aggregated Rs. 8,80,426, as compared with Rs. 8,01,992 in the previous year, the increase being Rs. 78,434. The increase is mainly under buildings, the expenditure under this head being Rs. 79,552 as against Rs. 23,307 last year. The increase under the Government College and Secondary schools is due, mainly, to the progressive rate of pay in the salaries of the staff. Government Primary boys' schools exhibit a decrease, and Local fund and Municipal Primary boys' schools an increase. It is satisfactory to note that the expenditure on Primary education in Native States has risen from Rs. 13,283 to Rs. 14,162, and the expenditure on Aided Primary schools from Rs. 62,545 to Rs. 64,099. Under Local Fund and Municipal girls' schools, there is an increase of Rs. 1,505. The increase under Training schools for masters is explained by the entertainment of a European Superintendent for the Training Institution, Nagpur.

The decline in the expenditure under "Miscellaneous," including the Book Depôt, is explained, mainly, by the fact that less money was expended on the purchase of books, as it was expected that the Depôt would be taken over by a private firm.

11. The sources from which the expenditure detailed above was met are compared below :—

Sources of expenditure.

	1889-90.	1890-91.
	Rs.	Rs.
(1). Provincial Revenues	3,51,034	3,66,184
(2). Local rates and cesses	1,46,802	1,61,714
(3). Municipal funds	66,109	69,977
(4). Fees	74,400	79,344
(5). All other sources	1,63,647	2,03,207
Total ...	8,01,992	8,80,426

Of the total expenditure, Rs. 3,66,184 or 41·5 per cent. were met from Provincial funds, as against Rs. 3,51,034, or 44 per cent. last year. Local rates and cesses contribute 18·3, or about the same percentage of the total expenditure as in the previous year, and Municipal funds Rs. 69,977, or 7·9 per cent. as compared with Rs. 66,109, or 8 per cent. last year. The fee revenue is represented by Rs. 79,344, or a little over 9 per cent., the percentage being the same as it was last year. The receipts from other sources, which have increased by Rs. 39,560, contribute 23·7 per cent., as against 20 per cent.

Distribution of the expenditure amongst the different classes of institutions.

12. The subjoined table exhibits the distribution of expenditure amongst the different classes of institutions :—

Kind of institution.	Provincial Revenues		Local rates and cesses		Municipal funds.		Other sources		Total.	
	1889-90.	1890-91	1889-90	1890 91	1889-90.	1890-91.	1889-90.	1890-91	1889-90	1890-91
	Rs	Rs.	Rs.	Rs.	Rs.	Rs.	Rs.	Rs.	Rs	Rs
Colleges ...	17,341	17,762	.	...	2,850	2,850	25,304	24,342	45,495	44,954
Secondary schools ...	71,282	74,630	86,520	42,732	32,962	35,699	64,198	66,954	2,04,962	2,20,015
Primary schools and schools for special instruction ...	1,34,582	1,26,711	91,209	1,02,619	27,495	26,554	98,128	1,05,444	3,51,414	3,61,328
Total ...	2,23,205	2,19,103	1,27,729	1,45,351	63,307	65,103	1,87,630	1,96,740	6,01,871	6,26,297

The above table gives only the direct expenditure, not the sums spent on direction, inspection, buildings, scholarships, &c. The percentage of the total expenditure on Collegiate education was about the same as last year, *viz.* 7. Of this, Rs. 17,762, or rather above 39 per cent. were met from Provincial funds. It is noticeable that more than half the cost of Collegiate education was met from "other sources;" Rs. 2,850 were spent from Municipal funds. It is questionable whether Municipal funds should be spent on Collegiate education. The amount spent on Secondary education, *viz.*, Rs. 2,20,015, was 35 per cent. of the total expenditure, as against 34 per cent. last year. Of this, Rs. 74,630, or 33·9 per cent., were met from Provincial funds; local rates and cesses contributing about 18 per cent., Municipal funds a little over 16 per cent., and "other sources" about 30 per cent. Rs. 3,61,328, or 57·7 per cent. of the total expenditure, were spent on Primary education, as against 58 per cent, last year. Of this sum, 35 per cent., in round numbers, was paid from Provincial funds; a little over 28 per cent. from local rates and cesses; about 7 per cent. from Municipal funds, and rather over 29 per cent from "other sources."

13. The following table gives the cost of educating each pupil in all classes of institutions. Indirect expenditure, *viz.*, on direction, inspection, scholarships, &c., is excluded:—

Cost of educating each pupil.

Class of schools.		Number of schools.	Average number of scholars enrolled.	Average daily attendance.	Average cost of educating each pupil. Total cost.	Average cost of educating each pupil. Cost to Government.
Under Public Management.					Rs. a. p.	Rs. a. p.
Arts Colleges ...	...	1	87	74	230 6 1	164 4 0
Secondary schools for boys ...	Government ...	65	5,988	4,697	15 14 2	7 12 10
	Local Fund and Municipal ...	119	12,609	9,053	4 8 10	0 8 0
	Native States ...	7	334	223	13 0 10	...
Do. for girls ...	Government ...	1	103	89	6 1 1	3 0 5
Primary schools for boys. ...	Government ...	135	8,662	6,487	5 9 1	2 9 11
	Local Fund and Municipal ...	644	80,674	27,378	3 5 11	0 9 6
	Native States ...	98	5,618	3,528	2 8 4	...
Primary schools for girls ...	Government ...	28	1,142	689	6 5 2	3 14 7
	Local Fund and Municipal ...	36	1,596	1,087	4 13 3	0 11 8
	Native States ...	4	173	94	2 9 9	...
Special school ...	Masters ...	4	184	166	139 2 0	139 2 0
	Mistresses ...	1	24	21	254 5 4	254 5 4
Industrial schools ...	Government ...	9	187	120	11 1 7	10 15 6
	Local Fund ...	5	162	122	3 9 3	...
Drawing schools ...	Government ...	2	50	28	...	...
	Local Fund ...	...	...	...	...	...
Practical Engineering Class ...		1	17	13	170 5 7	170 5 7
Agricultural Class		1	34	27	63 8 0	63 8 0
Law schools		2	84	61	40 0 0	22 0 4
Under Private Management.						
Colleges ...	Aided ...	2	123	98	202 8 5	28 3 7
Secondary schools for boys ...	Aided ...	54	3,342	2,541	15 11 1	5 6 5
	Unaided ...	8	452	334	4 15 7	...
Primary schools for boys ...	Aided ...	452	20,292	13,173	3 2 6	1 2 1
	Unaided ...	101	3,728	2,482	1 14 10	...
Secondary schools for girls ..	Aided ...	6	139	122	56 1 9	23 6 8
	Unaided ...	...	...	...	...	...
Primary schools for girls ...	Aided ...	47	2,125	1,473	15 2 9	4 14 6
	Unaided ...	12	334	201	0 7 3	...
	Total ...	1,845	108,263	74,381	5 12 4	2 0 4

The total average cost of educating each pupil is Rs. 5-12-4, as compared with Rs. 5-11-4 in the previous year, and the cost to Government Rs. 2-0-4 as against Rs. 2-1-10. The cost of educating each pupil in the Government College has declined from Rs. 211-9-9 to Rs. 164-4-0. In aided Colleges the

cost of educating each pupil was Rs. 28-3-7, as compared with Rs. 41-4-6 in the previous year. The other figures exhibit little variation.

Expenditure on school buildings.

14. The expenditure on school buildings from Provincial funds is shown below :—

Expenditure on school buildings from the Public Works Department Budget 1890-91.	Amount.	Expenditure (Provincial) from the Educational Departmental Budget 1890-91.	Amount.
	Rs.		Rs.
(A). Repairs	1,564	(D). Repairs to Government buildings	12,826
(B). Minor works under Rs. 2,000. (C). Larger works above Rs. 2,000	9,120	(E). Minor works under Rs. 2,000 ...	
		(F). Minor grants-in-aid under Rs. 1,000	10,572
		(G). Larger grants above Rs. 1,000 ...	
Total ...	10,684	Total ...	23,398

The total expenditure on buildings was Rs. 34,082, as compared with Rs. 10,845 in the previous year. The increase is mainly due to the cost of enlarging the building of the Raipur High School and the grants-in-aid to the Hislop College and Convent school, Nagpur.

Fee receipts.

15. The following table gives particulars of the fee receipts :—

		1889-90.	1890-91.
	For Boys.	Rs.	Rs.
Colleges ...	Government	2,038	2,349
	Aided	1,024	1,373
Secondary schools ...	Government	19,571	18,073
	Local Fund and Municipal ...	4,379	5,157
	Native States	12	93
	Aided	6,792	9,009
	Unaided	583	271
Primary schools ...	Government	10,004	10,222
	Local Fund and Municipal ...	11,087	13,554
	Native States	236	334
	Aided	9,742	9,618
	Unaided	143	711
	Law schools	2,004	1,479
	Total fees for boys' schools ...	67,615	72,243
	For Girls.		
Secondary schools ...	Aided	1,837	1,869
Primary schools ...	Aided	4,064	4,228
Fees spent on furniture, buildings, &c., in boys' and girls' schools ...		884	1,004
	Total ...	6,785	7,101
	GRAND TOTAL OF FEES IN BOYS' AND GIRLS' SCHOOLS ...	74,400	79,344

The fee receipts aggregated Rs. 79,344, as against Rs. 74,400, the increase being Rs. 4,944, or 6·6 per cent. Fees in both the Government and the aided Colleges exhibit a small increase. The introduction of the new fee rules will, in future years, lead to a larger fee revenue in both these classes of institutions. The cause of the decline in the fee receipts of Government Secondary schools is explained below,—paragraph 50.

Fees in aided Secondary schools have risen from Rs. 6,792 to Rs. 9,009. In the fee receipts of both Government and Local Fund and Municipal primary schools there is a fair increase, especially in the latter class of institution.

Statement of receipts and charges furnished by the Comptroller.

16. The Statement of receipts and expenditure furnished by the Account Department is as follows :—

Receipts.	1st April to date, 12 months.	Expenditure.	1st April to date, 12 months.
EDUCATION.	Rs.	EDUCATION.	Rs.
Provincial.		Provincial.	
Fees, Government Colleges, General ...	2,898	Direction	25,483
„ Ditto. Do. Professional ...	933	Inspection	79,442
„ Ditto. Schools, General ...	27,154	Government Colleges, General	19,890
„ Ditto. Do. Special ...	...	Ditto Schools do.	1,59,088
Contributions...	73,171	Ditto do. Special	88,792
Income from Endowments	35,495	Grants-in aid	56,440
Miscellaneous	...	Payments by results	16,405
		Scholarships	17,544
		Miscellaneous	32,345
		Refunds	230
Total Provincial ...	1,39,651	Total Provincial ...	4,45,659
Local		Local.	
Fees, Schools, General	725	Inspection	55
Contributions	7,683	Government Schools, General	1,70,577
Miscellaneous	956	Grants-in aid	13,431
		Scholarships	11,015
		Miscellaneous	...
		Refunds	143
Total Local ...	9,364	Total Local ...	1,95,221
Total Receipts ...	1,49,015	Total Expenditure ...	6,40,880

The Comptroller's figures under the head of Expenditure are Rs. 6,40,880, against Rs. 8,78,194 shown in the Departmental return. The difference is accounted for by the fact that the following figures are not shown by the Comptroller :—

	Rs.
" Schools in Native States "	22,451
" Deputy Inspectors in Native States "	1,857
" Subscriptions, &c., and fees in schools under private management "	1,42,931
" Subscriptions, endowments and fees in District Council schools, except fees in District Council Secondary schools, English "	30,426
" Subscriptions, &c., and fees in Primary schools, and a portion of subscription and fees in Secondary schools " ...	29,556
" Unaided schools "	12,325
Total ...	2,39,546

17. The results of the various examinations for which students from these Provinces appeared, are compared below:—

Results of Examinations

	1889-90.	1890-91.
1. M. A. ...	2	...
2. B. A. ...	16	15
3. F. A. ...	46	39
4 Matriculation ..	120	103
5. Middle school ...	565	544
6. Upper Primary ...	7,026	7,202
7. Lower Primary ...	10,014	9,917
8. School of Art ...	53	32
9. L. M. and S. (Surgery) ...	...	...
10. L. C. E. (Engineering) ...	1	...
11. F. C. E Do. ...	...	...
12 L. L. B. Passes ..	1	4

The number of passes in the Matriculation Examination exhibits a marked decrease. The falling off in the number of successful candidates in the Bombay School of Art Examination from 53 to 32 is attributed, partly, to greater strictness in the examination. The appointment, however, of competent drawing masters in Middle schools will doubtless lead to better results in future years.

Physical training

18. Our efforts to promote athletic exercises and field sports, as encouraging a manly spirit and developing physical health, have not been relaxed. In Colleges the subject receives scant attention, see paragraph 45 below; but in Secondary and Primary schools, drill and gymnastics as well as games are successfully practised. All the High and Middle schools and most of the Primary schools are provided with gymnasia. Games such as cricket, rounders and badminton are practised in the High schools and in some Middle schools. Native games are encouraged in Primary schools. At the annual conferences of teachers held in each district, and, in some districts, in each Tahsil, contests in athletics are regularly held. In some districts, challange shields are offered for competition between school and school, the shield being retained by the school that wins it, until it is carried off by some other school in a future competition. The system of "boy captains," adverted to in last year's report, by which each class is drilled, and put through gymnastic exercises by the head of the class, has been successfully worked. It makes for discipline, and encourages emulation between class and class, so that drill and gymnastics cease to be, as they often were, a dull iteration of monotonous movements, but are entered into by the boys *con amore*. As regards extending the use of drill to the school room, as a means of maintaining discipline, this is often over-looked by teachers, and I can only repeat what I said in my last report, that it should not be neglected. The practice of allowing boys to rush to their classes in a confused crowd is fatal to order and discipline, especially in overcrowded schools. Swings, as a form of healthy exercise for girls, have been generally encouraged in girls' schools.

SECTION II.—Controlling Agencies.

Inspector-General of Education.

19. I was in charge of the office of the Inspector-General of Education throughout the year. Starting into camp from Jubbulpore in November, I travelled through parts of the Jubbulpore Seoni, Balaghat, Bhandara, Nagpur, Chhindwara, Betul, Hoshangabad, Narsinghpur and Saugor Districts, returning to Jubbulpore in March. I travelled 4,418 miles (607 by road and 3,811 by rail) and visited 141 schools with 9,144 pupils.

Work of Inspectors of Schools.

20. The following table gives particulars of the work done by the Inspectors of Schools:—

Name of officer.	Grade.	Miles travelled.		Number of days on tour.	Number of schools inspected.
		Rail.	Road.		
G. Thompson, Esq., B. A....	Inspector of Schools, Southern Circle.	3,111	2,448	250	359
J. Elliott, Esq. ...	Inspector of Schools, Northern Circle.	4,150	650	172	233
A. P. Mitchell, Esq. ...	Inspector of Schools, Eastern Circle.	862	1,571	217	211

21. Mr. Thompson spent 250 days on tour and travelled 2,443 miles by road and 3,111 miles by rail. As regards his work, I can only repeat what I said of it in my last report, *viz.*, that it was sound and thorough. I am much indebted to him for useful advice and valuable suggestions.

Mr. Thompson.

22. Mr. Elliott was 172 days absent from Head-quarters. He travelled 650 miles by road and 4,150 miles by rail. His work has been satisfactory. He has been at much pains to promote drawing and manual training, and took an active part in organizing the exhibition at Jubbulpore.

Mr. Elliott.

23. Mr. Mitchell spent 217 days on tour and travelled 1,571 miles by road and 862 miles by rail. He has shown great activity in visiting all the Feudatory States in Chhattisgarh, including Kalahandi and Bustar, which had hitherto never been seen by an Inspector of Schools. He is to be congratulated on having shown a large increase in the number of schools and scholars in his circle.

Mr. Mitchell.

24. The statement of work done by Deputy Inspectors is appended (*vide* Appendix H). The Deputy Inspectors of the Northern Circle made 1,192 inspections of schools, as against 1,404 in the previous year. They spent 1,648 days on tour, as against 1,773. The decrease is due to the closure of schools for Census operations. The officers deserving mention are Mr. Gadadhar Prasad Singh of Hoshangabad, Mr. Nago Yadao Rao of Narsinghpur, Mr. Kripashankar of Jubbulpore, and Mr. Bihari Lal of Damoh.

Work of Deputy Inspectors.

As regards the Southern Circle, the number of inspections was 1,570, and of days spent away from Head-quarters 2,080, as compared with 1,897 inspections and 2,091 days on tour in the previous year. The falling off is also to be attributed to Census operations. The work of all the Deputy Inspectors, with two exceptions, is favourably reported on. The officers deserving of special mention are Mr. Gopal Sitaram Panchbhai of Bhandara, who has been more successful than any other Deputy Inspector in the Central Provinces in introducing school gardens, and encouraging manual training; Mr. Jageshwar Bapuji of Wardha ; Mr. Jeorakhan Lal of Seoni, and Mr. Govind Raghunath Bapat of Chanda. The Deputy Inspector of Nagpur is reported to have failed to see that his schools were declining and to suggest and apply remedies. Mr. Rahamat Ali of Balaghat has been so unsatisfactory in his work, that it has been found necessary to transfer him on reduction of pay.

The work of the Deputy Inspectors in the Eastern Circle is contrasted below :—

		1889-90.	1890-91.
Number of inspections	...	1,111	1,137
Number of days on tour	...	1,234	1,398

With two exceptions, the work of these officers is reported to have been good. Mr. Jaideo Dixit, Deputy Inspector, Raipur Range, Mr. Jaye Lal of the Drug Range, and Mr. Ganpat Lal Choube of the Bilaspur District are specially mentioned for excellent work. Mr. Trilochan Misra of the Sambalpur District

is reported to have been careless, and to lack system and method in his work. Mr. Ramchandra Behara, Deputy Inspector of the Patna and Kalahandi Feudatory schools, was found to have completely neglected his work, and is to be removed from his appointment.

Extra Departmental Controlling Agencies.

25. The extra Departmental Controlling Agencies are the following :—

(1). District Councils and Local Boards.
(2). Tahsildars.
(3). School Committees.

I have reviewed, briefly, the work of these agencies in paragraphs 26 to 44 below.

District Councils and Local Boards.

26. *Jubbulpore.*—The strength of schools in this district has increased by 303 and the average daily attendance by 238, the latter being 68 per cent., as against 65 per cent. in the previous year. Fee receipts have risen from Rs. 1,759 to Rs. 2,075. Educational conferences were held at the Head-quarter stations of the 3 Tahsils during the sowing season vacation. Much attention has been paid to the new subjects of study, and instruction in general subjects has not been neglected. The District report is silent on the subject of the work of the District Council and Local Boards.

27. *Damoh.*—The District Council and Local Boards are reported to have worked in harmony, and to have taken an active interest in education. There is a slight decrease in the strength of schools and the average attendance, which is attributed to the prevalence of cholera and fever.

28. *Saugor.*—The members of the District Council and Local Boards are reported not to give much attention to education, in the matter of improving attendance, insisting on the punctual payment of fees, and raising local subscriptions for school requirements. Numbers exhibit a slight increase, but the attendance has declined, which is attributed to the effects of the partial failure of crops in the previous year. The percentage of attendance is however still good, being 71.

29. *Narsinghpur.*—The Deputy Commissioner reports that the District Council and Local Boards have not worked in such harmony as could be wished, and that none of these bodies has shown much interest in education. District Council members visited 11 schools only, and Local Board members 23 schools. The strength of schools and the average attendance in Council schools show a slight decrease, but fee receipts a small increase.

30. *Hoshangabad.*—The Deputy Commissioner reports that the President of the Council, Mr. Yado Rao, gave valuable advice and assistance to the Deputy Inspector of Schools; but Mr. Yado Rao can spare little time from his judicial duties for educational work. The District Council allowed the work of repairing their schools and providing them with gymnastic apparatus to fall into deplorable neglect. They have now, however, been aroused to a sense of the need of more energetic action. The Secretary of the Council,

Mr. Behari Lal Seth, discharged his duties to the best of his ability. The influence of the President of the Local Board, Hoshangabad, *viz.*, the Tahsildar, extended to the Local Board, as is apparent from the fact that in his Tahsil the members of the Board did much more educational work than their colleagues in other Tahsils. The number and strength of schools exhibit an increase.

31. *Nimar.*—The Deputy Commissioner reports that the District Council has done good work during the year, but that Local Board members rarely visit a school:—"The exceptions show that when a school is visited, it is "on an occasion when the member has his own business to transact at the "village he visits. To be public spirited enough to perform a duty because "it is self-imposed has never entered a member's head, and, with the class "of men now elected, never will." The strength and attendance in Council schools show little variation. Steps have been taken to remedy the evil adverted to in the report of last year, *viz.*, the over-payment of monitors, the establishment of the schools in the district having been revised. School buildings are reported to be in a neglected condition. It is hoped that steps will be taken to improve them.

32. *Nagpur.*—The District Council and Local Boards are reported not to have taken that active interest in education that might be expected of them. Attendance averages only 65 per cent. Instruction is reported to be unsatisfactory, and progress slow. The masters are careless of orders, indifferent to study, and not very respectful. This state of things probably accounts for the decline in strength of the schools in the district. The Inspector of Schools animadverts on the treatment of low castes in the schools of the district:—"They are treated like pariahs, obliged to lurk about the doors and "windows of the school, not allowed to touch the mat or farsh, never allowed "near a map, and their slates are thrown to them, as if they were dogs."

33. *Chanda.*—The District Council, Local Boards and Educational officers are reported to have worked in harmony. Numbers, attendance and fees have increased, the average attendance in Council schools being 66 per cent. The standard of instruction has been maintained, low-caste education has been fostered, and the efforts of the Department to give education a more practical bent have been seconded.

34. *Wardha.*—The District Council, whilst continuing to take a deep interest in education, is reported to have hardly borne out the promise of last year. The recommendations of Inspecting Officers have been tardily complied with, a fact which is attributed not so much to the unwillingness of the Council to carry out those recommendations, as to the slow routine of Council business. Primary education is, however, in a healthy state. Numbers and attendance in Council schools have slightly improved, the average attendance being 69 per cent.

35. *Bhandara.*—The District Council of Bhandara is reported to have maintained its reputation as being the most useful and efficient in the Southern Circle. There is a slight decrease in numbers and attendance, but the average

attendance in Council schools is good, *viz.*, 72 per cent., and the progress generally satisfactory. Members of Local Boards are reported not to have visited their schools with due frequency.

36. *Betul.*—The educational work of the District Council is reported to have been transacted with care and despatch. Numbers have increased by 174, and average attendance by 94. The latter however, for Council schools, is still unsatisfactory, being only 61 per cent. Results aided schools have been placed on a better footing, some progress has been made in improving school accommodation, and 3 new schools have been opened for Gonds.

37. *Balaghat.*—The condition of the schools in this district is not creditable to the District Council. Attendance is irregular, being only 63 per cent., and progress very slow. The Council has been badly served by the Deputy Inspector, who has been transferred. The Presidents of Local Boards, especially the President of the Barghir Tahsil, are reported not to have taken an active interest in education. The state of the schools in the Barghir Tahsil is reported to be very discreditable.

38. *Chhindwara.*—The schools under the management of the District Council are reported to have improved in several respects. There is a small decrease in numbers, but attendance has improved, being 70 per cent, and ordinary instruction is better than it was last year. The President of the Council and the Presidents of Local Boards have been very active in visiting schools. There has been no delay in the transaction of business, but no steps have been taken to extend education, or to educate low castes and aborigines.

39. *Seoni.*—The charge of the whole of the schools in the rural tracts of the district has, for the first time, been vested in the District Council. There is a small decrease in numbers and attendance, the percentage of attendance being 69. The work of the Council is favourably reported on. The President, Mr. Mahomed Hussein, visited a large number of schools and took an active interest in education. Local Board members have, also, been active in visiting schools. This, the first year of the Council's existence has been successful, so far as education is concerned. It is hoped that their future efforts will be directed, not only to the improvement of existing schools, but to the extension of education, especially amongst the aboriginal tribes.

40. *Bilaspur.*—The work of the District Council is favourably reported on. The suggestions of the Department received attention, and the despatch of business was generally prompt. The President of the Council paid 13 visits to schools. In one particular, however, the District Council failed in their duty, in not paying due attention to the repairs of school buildings, which are still in a neglected condition. The Council allotted Rs. 2,153 for the repairs of these buildings, but only spent Rs. 742, the balance having been allowed to lapse. This argues a careless and perfunctory system of administration. Local Board members are reported not to have been regular in their visits to schools. There is a slight decrease in the strength of Council schools, but a slight increase in average attendance and fee receipts.

41. *Sambalpur.*—The District report is silent on the subject of the work done by the District Council. The strength and average attendance of Council

schools have been maintained, and fee receipts have considerably increased. The members of the Sambalpur Local Board are reported to have neglected their schools.

42. *Raipur.*—The work of the District Council is on the whole favourably reported on. Members of Local Boards, especially those of the Dhamtari Tahsil, are said to have done good work in visiting schools with due frequency. There has been a large increase in the strength and average attendance, especially in the number of girls attending boys' schools.

Tahsildars.

43. The efficiency of Local Boards depends largely on the action of the Tahsildar, who is President of the Board. The work of these officers is, with some exceptions, favourably reported on. As regards the Northern Circle, in Jubbulpore, Pandit Krishna Rao of Murwara made the largest number of inspections, *viz.*, 64. Pandit Raghunath Gajanan did fair work, but failed to visit the aided schools in the Sehora Tahsil. The inspection work of Mahomed Hussein, of the Jubbulpore Tahsil, is the worst. He made only 22 inspections of 15, out of the 38 schools in the Tahsil, and these visits are reported to have been productive of no good. In Damoh, the work of the Tahsildars, especially that of Mr. Jaikrishna Babaji, who paid 47 visits to 31 schools in the interior and 32 visits to schools at Head-quarters, was generally good. In Saugor, the Tahsildar of Rehli, Pandit Deo Shankar, visited all the schools in his Tahsil Pandit Bapu Rao, Tahsildar of Khurai, and now of Rehli, and Syed Ibrar Hussein, Tahsildar of Khurai, both did good work. The Tahsildar of Saugor, Pandit Chintaman Rao, failed to visit 23 schools in his Tahsil. In Narsinghpur, the work of Tahsildars is favourably reported on. The Deputy Commissioner of Hoshangabad reports that Mr. Jairam Ganesh, Tahsildar of Hoshangabad, paid 75 visits to 29 schools. He has endeavoured to provide his schools with furniture and apparatus, and to open two new schools. He performed his educational duties with that zeal and energy which pervades all his work. The Tahsildar of Seoni, Mr. Wasyat Ali, has done a fair amount of work, but his visits to schools were not so useful as those of the Hoshangabad Tahsildar. Mr. Sher Mahomed, Tahsildar of Harda, might have done more for his schools than he did. His work has been unsatisfactory. He was aware of the fact that a considerable portion of country in the north of his Tahsil was utterly unprovided with schools, but he made no attempts to provide them. He has now been awakened to a sense of his duty. Mr. Ahmedulla, Tahsildar of Sohagpur, is also remiss in his educational work he has only 9 schools in his charge, one of which he left unvisited :—" He is as "useless in educational matters as he is in most of the other branches of his "work." The Tahsildars of the Nimar District, Mr. Habibullah of the Khandwa Tahsil and Mr. Bhagwant Rao of the Burhanpur Tahsil, are reported to have visited schools with due frequency, and to have heartily co-operated with the Deputy Inspector in enrolling boys and in securing attendance. In the Mandla District, Kazi Alimuddin, Tahsildar of Mandla, made only 9 inspections of 6 schools. He is reported not to have devoted as much of his time and energy to educational matters as he should have done. The Tahsildar of Dindori, Mr. Balmukund Purohit, made 10 inspections of 6 schools. The schools in his Tahsil have declined in numbers and attendance. He has also neglected the results aided schools in his Tahsil, which contain more boys from the aborigines and other

low castes than any other class of schools. Regarding the Southern Circle, in Nagpur, the Tahsildars left no schools unvisited, but in many instances their visits were formal and perfunctory. I am informed that, in one instance, the Tahsildar recorded his visit to a school, without dismounting from his horse. The Tahsildars of the Arvi and Wardha Tahsils are both reported to be interested in education. In the Bhandara District, the Tahsildars are reported to have been remiss in visiting schools. The Tahsildars of the Balaghat District, especially the Tahsildar of Barghir, are reported not to have done their duty to their schools, either as Tahsildars or Presidents of Local Boards. In Chhindwara, the Tahsildars neglected no school, and in most instances their visits had been sufficiently frequent. In Seoni, the visits of Tahsildars to schools have not been as frequent as they might have been, considering the small number of schools. The Tahsildars of the Betul District are reported to have shown neither activity nor interest in education, whilst the Tahsildars of Chanda paid a moderate number of visits to their schools.

Turning to the Eastern Circle, the Tahsildars of the Raipur District are reported to have paid more numerous visits to schools than they did last year. Mr. Harihar Padhan, Tahsildar of Dhamtari, is specially commended. The Tahsildars of the Bilaspur District, especially Mr. Madho Singh, B. A., were fairly regular in their visits to schools, and took some interest in education. In the Sambalpur District, both the Tahsildars neglected their work. Mr. Abdul Azim, Tahsildar of Sambalpur, paid only 14 visits to his schools, and the Tahsildar of Bargarh, Mr. Amarnath, 21 visits. This is very unsatisfactory.

School Committes.

44. As regards School Committees, the reports on their work would seem to justify the remark made in last year's report, *viz.*, that they are "the most useful and important factors "in our educational system." The Inspector of Schools, Northern Circle, reports that the School Committees were generally regular in holding meetings, and were conspicuous for their liberality in subscribing for school requirements and for prizes, on the occasion of examinations. Some Committees were, in the previous year, inclined to relax the fee rules in favour of Brahmins, but the large increase in the fee collections show that this practice is being gradually discontinued. The only district in the Northern Circle in which the School Committees are unfavourably reported on is Mandla, the Deputy Commissioner of which reports that "the Committees are ineffective and "irregular in their visits. Until their sympathy and co-operation can be enlisted, "education cannot be expected to make any appreciable advance in popularity."

The Inspector of Schools, Southern Circle, reports that in all his districts, except Nagpur and Balaghat, the School Committees have taken an interest in their schools. Regarding the Committees of Nagpur and Balaghat, he writes:— "In Nagpur, Committees are very indifferent to the interests of their schools, "in this respect taking their cue from Local Boards, and in Balaghat, notwith- "standing numerous meetings, School Committees are singularly ineffective and "very illiberal." During my tour of inspection, School Committees invariably attended my examinations and were liberal in offering prizes. It is to be regretted that the Committee system has not yet found a place in results aided schools. I have issued a Circular on the subject.

SECTION III.—University Education.

College statistics.

45. The statistics of Colleges are shown below:—

Colleges.	Number.	Students.	Average attendance.	Expenditure. Provincial.	Municipal	Fees.	Other sources	Total	Cost of educating each pupil. Total cost.			Cost to Goverment.			Number passed B. A.	Number passed F. A.
				Rs.	Rs.	Rs.	Rs	Rs.	Rs.	a.	p.	Rs.	a.	p.		
Government ...	1	87	74	14,290	...	2,349	3,404	20,043	230	6	0	164	4	0	3	21
Aided ...	2	125	98	3,472	2,850	1,373	17,216	24,911	202	8	5	28	3	7	12	16
Total ...	3	212	172	17,762	2,850	3,722	20,620	44,954	214	1	0	84	9	3	15	·37

The average attendance in the year under report was 172, as compared with 152, in the previous year. The rules alluded to in paragraph 4 above, which make the University Examinations the test for admission into the higher appointments in the Revenue and Judicial Service, will, I anticipate, stimulate higher education and lead to a large increase in the strength of Colleges, in future years. The fee receipts in the Government College have risen from Rs. 2,088 to Rs. 2,349, and in the two aided Colleges from Rs. 1,025 to Rs. 1,373. The rates charged in the two latter institutions are still very inadequate, but under the new rules, the levy of fees at certain rates is made a condition of aid. This will doubtless lead to a considerable enhancement of the fee revenue in aided Colleges. 15 candidates passed the B. A. and 39 the F. A. Examinations, as against 14 and 43, respectively, last year. As regards physical training, it is much to be regretted that, whilst our schools are conspicuous for their excellence in the subject, it receives little or no attention in our Colleges. The Jubbulpore College formerly possessed the reputation of being the best, in point of drill and gymnastics, in the Provinces. It now stands amongst the worst in this respect, and in the two aided Colleges nothing has been done to promote physical training. College Principals should bear in mind the remark of an eminent English physician:—"That proper exercise of the "body is a powerful factor in the development of the mind, is no paradox, "but a plain physiological truth." The pallid faces, narrow chests and stooping shoulders of most College students attest the effects of over-study, not counteracted by physical exercise. Some good has been done by the alteration in the Scholarship rules, which require scholarship-holders to qualify in drill and gymnastics, as a condition of the receipt of their scholarships, but all students are not holders of scholarships.

The Jubbulpore College.

46. The statistics are as follows :—

Year.	Number on roll on the 31st March.	Average number on roll.	Average attendance	Percentage of attendance.	Expenditure.				Cost of educating each pupil.	
					Provincial Revenues.	Endowments.	Fees.	Total.	Total cost.	Cost to Government.
					Rs.	Rs.	Rs.	Rs.	Rs. a. p.	Rs. a. p.
1889-90..	62	64	53	83	13,543	3,404	2,038	18,985	296 10 3	211 9 8
1890-91..	87	87	74	85	14,290	3,404	2,349	20,043	230 6 0	164 4 0

The average number enrolled has increased by 25, or by 41 per cent. The average attendance, *viz.*, 85 per cent, is satisfactory. Fee receipts show an increase of Rs. 311. The increase in the expenditure is due to the ordinary increments in the salaries of the Professors. The cost of educating each pupil has fallen from Rs. 296 to Rs. 230. In 1884-85 the cost of educating each pupil was Rs. 339, of which Government paid Rs. 314, or 93 per cent. This year Government pays Rs. 164, out of Rs. 230, or about 71 per cent. This is satisfactory from a financial point of view. In the B. A. Examination, 3 passed (1 with Honours) out of 8 presented, and in the F. A. Examination, 21 out of 30. Last year, 4 candidates passed the B. A., out of 6 examinees, and 17 out of 25 the F. A. Examination. The two boarding houses attached to the College have been well managed, under the monitorial system, during the year. Physical training continues to be neglected, in spite of the fact that the College has been supplied with a special instructor in drill and gymnastics.

The Hislop College.

47. The number enrolled at the end of the year was 66, as compared with 46 last year.

The financial statistics are as follows :—

		Rs.
Grants from Provincial Funds	...	3,472
Endowments, subscriptions, &c.	...	10,896
Fees ...	...	952

The cost of educating each pupil was Rs. 232-1-11, and the cost to Government Rs. 52-9-8. It is a satisfactory feature that the fee receipts have increased from Rs. 360 to Rs. 952. The results of the University Examinations were satisfactory. For the B. A. Examination, 13 appeared and 8 passed (two in Honours), and for the F. A. Examination 8 were presented and 6 passed, as against 7 and 11 passes, respectively, in the previous year. The new building is now complete, and is, in every respect, an excellent school-house. Arrangements for a play ground and gymnasium have not yet been made, but the Manager promises to take steps in this direction next year.

Morris College.

48. The strength at the end of the year was 59, against 44 last year.

The financial statistics were as follows :—

		Rs.
Grants from Municipal Funds	...	2,850
Proceeds of endowments, &c.	...	6,320
Fees	...	421

The cost of educating each pupil was Rs. 162-0-9. The fee incidence was about Rs. 7, as against Rs. 10 last year. I do not suppose that in any institution in India can Collegiate education be obtained for the consideration of Rs. 7 per annum. 13 candidates appeared for the B. A. Examination, with 4 passes, and 15 for the F. A. Examination, of whom 10 passed, as compared with 4 passes in the B. A. Examination and 15 in the F. A. Examination, last year.

SECTION IV.—School Education—General.

A.—Secondary Schools.

Statistics of Secondary Schools

49. The statistics of Secondary schools for the past 2 years are compared in the following table :—

Secondary Schools.		1889-90. Schools.	1889-90. Pupils.	Passed Entrance or Middle school examination.	1890-91. Schools.	1890-91. Pupils.	Passed Entrance or Middle school examination.
HIGH SCHOOLS.							
Government ..		4	255	61	4	271	39
Aided ...		6	309	54	5	338	55
Unaided ...		1	36	2	1	9	1
Total ...		11	600	117	10	618	95
MIDDLE SCHOOLS.							
Government ...	English ...	35	2,585	311	35	2,984	323
	Vernacular.	29	3,437	...	26	3,228	...
Local Fund and Municipal	English ...	4	156	14	4	216	15
	Vernacular.	104	11,675	...	115	13,022	...
Native States ...	English ...	2	29	...	3	66	...
	Vernacular	4	366	...	4	273	...
Aided ...	English ...	19	1,094	177	19	1,143	166
	Vernacular.	27	1,553	...	30	1,898	...
Unaided ...	English ...	5	222	46	4	161	29
	Vernacular.	1	91	...	3	265	...
Total ...	English	65	4,086	548	65	4,570	533
	Vernacular.	165	17,122	...	178	18,686	...
Grand Total ..	English ..	76	4,686	665	75	5,188	628
	Vernacular.	165	17,122	...	178	18,686	...
Total ...		241	21,808	665	253	23,874	628

The number and strength of High schools remain much the same. There has been an increase of 12 in the number of Middle schools, owing to the raising of the standard of certain primary schools. The number enrolled has increased from 4,086 to 4,570, in English Middle schools, and from 17,122 to 18,086, in Vernacular Middle schools. The total increase in strength under Secondary schools was 2,066, or 9·4 per cent.

The Matriculation and Middle school results were as follows :—

	1889-90.		1890-91.	
	Presented.	Passed.	Presented.	Passed.
Matriculation	273	120	316	103
Middle school	794	565	867	544

One of the main defects in our Secondary schools is the poor educational attainments of the teachers. Most of them have only passed the Matriculation Examination, whereas a teacher of a Secondary school or, at least, of the upper classes thereof, should possess higher academical qualifications. It is doubtless true that the supply of qualified teachers is not equal to the demand, but the difficulty of obtaining good men is enhanced by the fact that service in Secondary schools has, since the transfer of these schools to local bodies, ceased to be pensionable. This, naturally, makes the service less attractive, and causes discontent and dissatisfaction amongst existing incumbents. The teaching of a discontented master, however high his qualifications, is apt to be mechanical, flat and unprofitable. Further, the discipline and tone of a school depend largely on the personality of the teacher, and if the teacher is dissatisfied with his position, his influence on the morals and manners of his pupils is hardly likely to be good. In the hope of remedying this state of things, I have suggested the establishment, in each district, of a Provident Institution, the object of which is to provide pensions for teachers. The proposal is under consideration, but I am persuaded that, if sanctioned, it will materially improve the position and prospects of young men entering the profession and, by attracting a better class of men, will conduce not only to improved teaching, but also to a higher tone and better discipline in schools. The influence of the class for the training of Secondary school teachers is distinctly visible, in improved methods and more intelligent teaching, in such schools as have been supplied with teachers trained in the class.

High School attached to the Jubbulpore College.

50. The statistics were as follows :—

Year.	Number on roll on 31st March.	Average number on roll.	Average attendance.	Percentage of attendance.	Expenditure from			Cost of educating each pupil.	
					Provincial Revenues	Fees.	Total.	Total cost	Cost to Government.
					Rs.	Rs.	Rs.	Rs. a. p	Rs. a. p.
1889-90 ...	176	198	159	80	3,617	4,632	8,249	41 10 6	18 4 3
1890-91 ...	181	198	163	82	4,214	4,198	8,412	42 7 9	21 4 6

Numbers show little variation, but the average attendance has improved. The increase in expenditure is due to the progressive pay of some of the teachers. The decline in the fee receipts is explained by the fact that the receipts of the previous year were swelled by the collection of arrears due for the year 1888-89. The cost to Government of educating each pupil has consequently risen from Rs. 18-4-3 to Rs. 21-4-6. The classes are unduly large, being as follows:—

Preparatory class	...	...	92
Entrance class	...	...	89

I have, however, taken steps to reduce the number. 89 candidates appeared for the Matriculation examination, of whom 21 only passed, as compared with 79 candidates and 42 passes, in the previous year. No satisfactory explanation is given for the failure, but I think that the unwieldy size of the classes has had something to do with it. It is satisfactory to note that drawing was taught to 30 students, of whom 19 took it up as an optional subject for the Matriculation examination. 24 candidates appeared for the Bombay School of Art examination, but the results were unsatisfactory. Drill and gymnastics receive scant attention.

Saugor High School.

51. The statistics are compared below :—

Department	Number on the rolls		Average attendance		Fees		Passed by prescribed examination	
	1889 90	1890-91.	1889-90.	1890-91	1889-90	1890-91	1889-90.	1890 91
					Rs.	Rs.		
High School	29	88	39	47	556	620	11	9
Middle School ...	256	277	169	192	819	811	32	29
Upper Primary	92	96	90	83	403	298	110	57
Lower Primary	553	507	409	459	512	508	78	114
Total ...	930	918	707	781	2,290	2,237	231	209

The number enrolled was 918 against 930, and the average daily attendance 781, as compared with 707, in the previous year. The fee receipts were Rs. 2,237, as against Rs. 2,290, the decrease being confined to the English Primary school. 9 candidates passed the Matriculation examination, and 29 the Middle school examination, as compared with 11 and 32 passes, in the previous year. Passes by the Upper Primary examination were 57, and by the Lower Primary examination 114, as against 110 and 78 respectively. Much attention is paid to drawing, which is now excellently taught in the school. A manual training class has also been opened, and is well attended. In point of drill and gymnastics, the school is second to none in the Provinces. Cricket, lawn tennis and rounders are, also, practised. The school garden is kept in good order by the boys. The tone, discipline and general management of the school reflect credit on the Head Master and his assistants.

Raipur High School.

52. The figures are as follows :—

Department.	Number enrolled.		Average attendance.		Fees.		Passed by prescribed examination.	
	1889-90	1890-91.	1889-90	1890-91	1889-90	1890-91	1889-90	1890-91.
					Rs.	Rs.		
High School	26	32	25	24	390	365	5	6
Middle School ..	180	197	155	159	833	838	14	29
Upper Primary. English ...	111	105	111	99	559	466	52	70
Upper Primary. Vernacular ...	85	201	71	152	90	128	5	15
Lower Primary	433	303	293	262	291	256	92	63
Total .	835	838	655	696	2,163	2,053	168	183

The strength shows a decline from 835 to 821. Fee receipts have fallen from Rs. 2,163 to Rs. 2,053. The school has suffered considerably from want of proper accommodation and from the inadequacy of the staff. Steps have been taken to remedy these defects. A sum of Rs. 6,000 was sanctioned for the extension of the building, and two additional teachers have been appointed. 16 students appeared for the Matriculation examination, of whom 6 passed, as compared with 7 candidates and 5 passes last year. In the Middle School examination, 50 candidates appeared and 29 passed, as compared with 22 and 14 respectively, in the previous year. The results in drawing of candidates who appeared for the Bombay School of Art were very unsatisfactory, though the Drawing master possesses high qualifications. In point of physical training, the school maintains its reputation as being one of the best in the Central Provinces. Cricket, badminton, rounders and other games are regularly played. A set of badminton bats was kindly presented to the school by Rai Bahadur Bhuth Nath Dé, Secretary to the Municipal Committee. The tone and discipline of the school are excellent.

Sambalpur High School.

53. The following table gives the statistics of the institution :—

Department	Number enrolled.		Average attendance.		Fees.		Passed by prescribed examination.	
	1889-90.	1890-91.	1889-90.	1890-91	1889-90.	1890-91.	1889-90	1890-91.
					Rs.	Rs		
High School	24	20	19	17	297	330	2	3
Middle School	101	107	79	73	416	389	13	10
Upper Primary	50	44	35	31	174	171	36	25
Lower Primary	195	131	127	90	99	72	146	88
Total ...	370	302	260	211	986	962	197	126

The figures show little improvement. Three candidates only passed the Matriculation examination, as compared with 2 last year. This is unsatisfactory. The institution is the only High school in the Uriya tracts, and should be the source for the supply of English-knowing officers for the school itself and for Government and other offices. It is therefore of the utmost importance, for the future development of Sambalpur, that the High school should be maintained in a state of efficiency. At present, it cannot be said to meet the demand for educated men in the district. The staff of the school is mainly composed of Mahratha teachers from Nagpur, who, in language and customs, are alien to their pupils. I am inclined to think that, until the school is able to show a better outturn of successful candidates in the Matriculation examination, it would be wiser to import teachers from Cuttack. In the Middle School examination, 10 candidates passed, as against 13 in the previous year. Drill and gymnastics are successfully practised. Drawing is taught by a competent master, but the results of the Bombay School of Art examination were very unsatisfactory.

High School attached to the Hislop College, Nagpur.

54. The statistics are detailed below :—

Department.	Number enrolled.		Average attendance.		Fees.		Passes.	
	1889-90.	1890-91.	1889-90.	1890-91.	1889-90.	1890-91.	1889-90.	1890-91.
					Rs.	Rs.		
High school.	107	102	97	109	537	565	10	21
Middle school.	98	101	62	64	239	296	34	17
Upper Primary ...	34	57	30	31	66	93	25	35
Lower Primary ...	216	242	143	186	213	353	29	61
Total ...	455	502	332	390	1,055	1,307	98	134

The strength has increased from 455 to 502, the average attendance from 332 to 390, and the fee receipts from Rs. 1,055 to Rs. 1,307. In the Matriculation and Middle school examinations, 21 and 17 candidates were successful, as compared with 10 and 34 in the previous year. Both the Upper and Lower Primary examinations show an increase. The main school is now located in the new College building, and the staff has been strengthened. Drawing has been introduced. I regret to say that nothing has yet been done, in the main school, for physical training. I trust that the Manager will take early steps to provide instruction in this important branch of education.

City Aided High School, Nagpur

55. The figures are as follows :—

Department.	Number enrolled.		Average attendance.		Fees.		Passes.	
	1889-90.	1890-91.	1889-90.	1890-91.	1889-90.	1890-91.	1889-90.	1890-91.
					Rs.	Rs.		
High school.	126	165	130	147	892	1,224	30	27
Middle school.	220	191	151	166	604	673	50	46
Upper Primary ...	105	93	79	82	296	179	45	61
Lower Primary ...	293	368	234	342	384	368	50	57
Total ...	744	817	594	737	2,176	2,444	175	191

The institution shows satisfactory progress in point of numbers, average attendance and fee receipts. The results of the Matriculation and Middle School examinations were creditable. In the former 27, and in the latter, 46 candidates were successful, as against 30 and 50 passes, respectively, in the previous year. Drawing is successfully taught, and some attention is paid to drill and gymnastics. I trust that the Managers will soon be able to supply the school with Physical science apparatus. The building is dark and imperfectly ventilated, though the over-crowding, alluded to in last year's report, has been somewhat relieved. The institution still continues to be the best aided school in the Central Provinces.

Christ Church Mission High School, Jubbulpore.

56. The statistics of the school are as follows :—

Department.	Number enrolled.		Average attendance.		Fees.		Passes.	
	1889-90.	1890-91.	1889-90.	1890-91.	1889-90.	1890-91.	1889-90.	1890-91
					Rs.	Rs.		
High school.	38	43	33	34	218	237	11	3
Middle school.	105	118	79	89	168	195	12	13
Upper Primary ...	72	112	6	60	44	53	44	34
Lower Primary ...	651	702	485	499	489	469	90	94
Total ...	866	975	603	682	919	954	157	144

The number enrolled has risen from 866 to 975, the average daily attendance from 603 to 682, and the fee collections from Rs. 919 to Rs. 954.

The results of the various examinations are :—

Matriculation passes	...	3	against	11	last year.
Middle school „	...	13	„	12	„
Upper Primary „	...	34	„	44	„
Lower „ „	...	94	„	90	„

The results of the Matriculation examination are disappointing. I visited the school twice during the year, and was well pleased with the general progress. Physical training, which had formerly been neglected, now receives proper attention. The building and apparatus have been improved. Physical science apparatus will, I am informed, shortly be supplied, and the staff has been strengthened. Manual training and drawing have been introduced. The general management of the institution reflects credit on the Managers, who always loyally comply with the wishes of the Department.

Mission High School, Seoni (Chhapara).

57. The statistics are :—

Department.	Number enrolled.		Average attendance		Fees.		Passes.	
	1889-90.	1890-91.	1889-90.	1890-91.	1889-90.	1890-91.	1889-90.	1890-91.
					Rs	Rs.		
High school.	18	12	14	11	59	50	...	1
Middle school.	28	15	29	17	47	58	1	2
Upper Primary ...	12	12	15	12	16	18	...	7
Lower Primary ...	156	154	93	101	40	36	...	24
Total ...	214	193	151	141	162	162	1	34

The school was so unfavourably reported on, that the question of the continuance of the grant was considered. I visited the school myself in December last, and found some improvement. The staff had been strengthened, drawing introduced, object lessons taught, physical training commenced, and the general instruction improved. As a High school, the institution cannot be considered a success. I question whether there is material for a High school at Seoni. One candidate, only, succeeded in passing the Matriculation examination, in the year under review. I should be disposed to advise the Managers to confine themselves to a Middle school, which would be useful for the instruction of the lower classes of Hindus and Mahomedans at Seoni.

58 The number of Middle schools classified according to the agency by which they are managed is as follows:—

Middle Schools.

Government schools	61
Under the management of Local Bodies ...	119
Aided	49
Unaided	7
Under the management of Feudatory States ...	7

65 are Anglo-Vernacular schools, and 178 Vernacular schools. Of the Anglo-Vernacular schools, 36 are of the 2nd grade, *i. e.*, they are not provided with a staff sufficient to prepare pupils for the Middle school examination. As observed in last year's report, they are, as a rule, a failure, because the instruction, stopping short of the Middle school examination, leads to nothing. I can only repeat the remarks made in the report of last year, that Local Bodies, to whom Middle schools are being transferred, should have in view the raising of the standard of 2nd grade Middle schools.

The results of the Middle school examination of the more important Middle schools are given below :—

No.	Name of school.	Number sent up.	Number passed.	No.	Name of school.	Number sent up.	Number passed.
	Under Public Management.						
1	Middle School, Bilaspur ...	10	9	18	Middle School, Wardha ...	22	18
2	Do. Murwara ...	7	4	19	Do. Hinganghat ...	14	11
3	Do. Narsinghpur ...	19	12	20	Do. Arvi ...	8	7
4	Do. Gadarwara ..	16	9	21	Do. Chanda ...	28	25
5	Do. Sohagpur .	6	4	22	Do. Warora ...	6	5
6	Do. Hoshangabad .	19	9	23	Do. Bhandara ...	27	21
7	Do. Seoni-Malwa .	7	5	24	Do. Katol ...	6	3
8	Do. Harda ..	15	11	25	Do. Ashti ...	6	2
9	Do. Khandwa ...	25	13	26	Do. Betul ...	6	3
10	Do. Burhanpur ...	11	6	27	Do. Chhindwara ...	13	13
11	Do. Hatta ...	7	6	28	Do. Badnur . .	14	10
12	Do. Damoh ...	12	11	29	Do. Seoni-Chhappara ...	9	7
13	Do. Umrer ...	15	13				
14	Do. Ramtek ...	11	11	30	Do. Burha ...	8	8
15	Do. Kamptee ...	10	7	31	Do. Multai ...	7	4
16	Do. Khapa	5	1				
17	Do. Saoner ...	5	1		Total ...	374	269
	Under Private Management.						
1	R. B. S. G. B. Mahajani school, Jubbulpore ...	14	5	6	Andhra Sabha school, Nagpur.	11	9
2	Sadar Bazar Mission school, Jubbulpore ...	5	2	7	Sitabaldi Grant-in-aid school, Nagpur ...	11	4
3	Hitcarni Sabha school, Jubbulpore ..	43	31	8	New English school, Nagpur ..	15	8
4	Anjuman Islamia school, Jubbulpore ...	11	4	9	M E. Mission school, Kamptee.	17	5
5	Jagannath Middle school, Mandla ...	11	6	10	Native Institution, Nagpur ...	12	8
				11	English school, Deoli ...	7	2
					Total ...	157	84
					GRAND TOTAL ...	531	353

Most of the Government schools have done fairly well. The schools at Chhindwara, Burha and Ramtek passed cent. per cent. of candidates presented, and the Wardha, Chanda, Bhandara, Damoh; Bilaspur and Umrer schools did remarkably well. Of the aided schools, the Hitkarni school, Jubbulpore, the Andra Sabha school, Nagpur, and the Native Institution, Nagpur, did the best. Increased attention has been paid during the year to the encouragement of technical subjects in Middle schools. Physical science is taught in all of them by men who have obtained certificates in the periodical examinations held, at certain centres, by the itinerant instructors in that subject. The necessary apparatus has been supplied, mainly by private subscription, to most schools. Special Drawing Masters have been provided, in the majority of the schools, and the subject is generally taught with marked success. It is optional in Middle schools, but the subject is so popular that it is, as a rule, taken up by every boy, with hardly an exception. The school at Hinganghat stands *facile princeps* in drawing amongst all the Middle schools of the Provinces At the last Bombay School of Art examination, three of its pupils obtained 2nd grade certificates, and five 1st grade certificates. Classes in manual training have been opened in a fair number of schools. With the introduction of the new curriculum, in which the subject has been made compulsory, it will, in future, be more systematically taught. School gardens exist in most schools, and are proving not only ornamental but useful to the boys, in providing them with healthy occupation, out of school hours. Phyiscal training, also, has received its due share of attention. The gymnasia are generally in good order, and drill and gymnastics are taught daily, each class having its own "boy captain." As regards school buildings, the accommodation in Government and Board schools is generally adequate, though in some cases the increasing demand for English education has led to over-crowding. The lighting and ventilation are, as a rule, good. In aided schools the buildings are often over-crowded, ill-lighted and ill-ventilated. As regards discipline and moral training, if "conduct is three-fourths of human life," these should receive a large share of attention indeed. As the moral tone of a school depends mainly on the personal character of the teacher, it is of the utmost importance to select the right class of men as teachers. Given teachers of a high type of character, with altruistic aims and a pride in their profession, and the discipline and tone of a school cannot be otherwise than good, whatever the internal regulations be. Rules and regulations, such as inter-school rules and conduct cards, which we have introduced, are of little avail in the absence of the personal example set by the teacher, not only in but out of school. It is out of school that teachers often neglect their opportunities. Most of them think that their duties end with the class room, whereas they could do much to shape the character of their pupils for good by mingling with them in their sports and pastimes, out of school hours.

B.—Primary Education.

59. The comparative statistics of Primary schools are detailed in the following table:—

Primary education

Primary Schools.	1889-90										1890-91.									
	Number of schools.	Number of scholars.	Average daily attendance.	Provincial.	Cess.	Fees.	Subscription and other sources.	Total.	Total cost.	Cost to Government.	Number of schools.	Number of scholars.	Average daily attendance.	Provincial.	Cess.	Fees.	Subscription and other sources	Total.	Total cost.	Cost to Government.
				Rs	Rs	Rs.	Rs.	Rs.	Rs. a p.	Rs. a. p				Rs.	Rs.	Rs.	Rs.	Rs	Rs. a. p	Rs. a p
Under Public Management																				
Government ...	141	8,656	6,565	24,026	453	10,004	16,357	50,840	5 13 1	2 12 0	135	8,031	6,487	22,732	...	10,222	15,278	48,232	4 14 0	2 10 0
Local Fund and Municipal ...	646	41,414	26,792	23,023	85,123	11,087	6,757	1,25,990	3 2 4	0 9 2	644	41,989	27,378	24,261	92,020	13,554	7,251	1,37,086	3 5 11	0 9 4
Native States ...	99	6,021	3,487	...	...	236	13,052	13,288	2 4 5	...	98	5,967	3,528	...	...	334	13,828	14,162	2 8 3	...
Under Private Management.																				
Aided ...	461	20,342	13,306	30,482	124	9,742	22,197	62,545	3 1 4	1 8 0	452	20,882	13,173	22,967	4,319	9,618	27,175	64,099	3 2 6	1 2 1
Unaided ...	82	3,490	2,289	...	...	143	5,916	6,059	1 13 3	...	101	4,008	2,482	...	...	711	6,484	7,195	1 14 10	...
Total ...	1,429	79,923	52,439	77,531	85,700	31,212	64,279	2,58,722	3 4 11	0 15 10	1,430	80,877	53,048	69,980	96,339	34,489	70,016	2,70,774	3 6 5	0 14 2

The number of Primary schools and scholars in the year under review was 1,430 and 80,877 as compared with 1,429 and 79,923, respectively, in the previous year. The increase in the number enrolled was 954, or a little over 1 per cent. Classified according to the agency by which they are managed, the schools are as follows:—

Government schools	135
Under the management of Local Bodies ...	644
Aided	452
Unaided	101
Under the management of Feudatory States ..	98
Total ...	1,430

The attempt to give education a more practical and useful turn in Primary schools, by the introduction of drawing, Kindergarten occupations, and manual training and object lessons, has been as successful as could be expected, considering the machinery at our disposal. Most schools have been supplied with Kindergarten apparatus. When the subject is taught by a trained master, it is usually popular and attractive with the pupils, but in the hands of untrained men, it is apt to degenerate into mere mechanical routine; and, as the majority of our teachers are untrained men, the instruction is often of the latter kind. In most schools some of the branches of manual training, *viz.*, wood work, modelling in clay and card-boards and paper cutting are attempted. In some schools, the subject is excellently taught, but, in the majority, the attempts are of the crudest description. In this, as in Kindergarten occupations, success must await the gradual supply of trained teachers from our Normal schools. Instruction in object lessons has improved. The great want is a good text book in the vernaculars. I am having an English text book on the subject adapted to Indian uses. It is in drawing that the greatest progress is visible. This is now taught in almost every school, as part of the course. It is very popular both with teachers and boys, and the instruction in it has distinctly improved. A set of drawing cards has been prepared by Mr. Hardikar, Drawing Master of the Training Institution, Nagpur, and has been lithographed at a sufficiently cheap rate, to admit of its being supplied to all Primary schools. Agriculture is taught in every school; but as the masters are entirely ignorant of the subject, the instruction can be of little practical use. Arrangements have however, been made to train Primary schoolmasters in the elements of agriculture, in the Agricultural class, Nagpur. Two batches, of 36 men in each batch, will join that institution next year for a course of training, the course being for 6 months. With the view of enabling the masters to illustrate the subject, and of providing the boys with useful and healthy occupation, school gardens have been opened, where practicable. The work of watering and planting is done by the boys themselves, each boy having his own plot of ground assigned him. European and Native vegetable seeds were kindly supplied by Mr. Fuller. During my tour of inspection I was much struck with the excellence of some

of the school gardens, especially in the Bhandara District. One incidental result of the introduction of school gardens is reported by the Inspector of Schools, Eastern Circle, who writes as follows:—

"132 gardens, with 36 wells, have been started in the Chhattisgarh Division. In the Uriya schools I am glad to notice that school gardens are proving an indirect blessing to the people. All efforts to induce the Uriyas to drink well-water in preference to the water of their filthy tanks have hitherto proved unavailing. Wells have consequently become foul and stagnant for want of use. The school wells, however, which are in regular use for gardening purposes, alway remain sweet and clear. The boys who drink from the school wells soon acquire a taste for good water, and I have more than once found the school well used by the villagers in preference to the tank, the original impulse in this direction having doubtless come through their children."

The tone and discipline in primary schools is generally good. Neat uniforms are worn in a large number of schools. Drill and gymnastics and native games receive attention in the schools of every district, except perhaps Nagpur. As remarked by the Inspector of School, Southern Circle, "the results are satisfactory, as evidenced by improved physique and better "discipline." In Government and Board schools, except those in the Bilaspur District, the buildings are, as a rule, sufficiently large and well ventilated and lighted. In aided schools, however, buildings are little more than hovels. As regards the pay of primary school teachers, the Inspector of Schools, Northern Circle, writes:—

"The pay of the majority of village schoolmasters is miserably low. The present scale of pay was fixed more than a quarter of a century ago, before the advent of railroads, when living was cheaper than it is now. Since then, wages of all kinds have increased, and many railroad coolies now receive as much as an elementary schoolmaster. The effect of this is that we do not get such good material for our Normal schools as we might, if the pay and prospects were better. Our best men leave us as soon as they can, to better themselves elsewhere, only the inferior men remaining. Until the minimum pay of a Primary schoolmaster is raised from Rs. 8 to Rs. 12 the Department will not be able to retain the services of its best trained men."

I concur in these remarks.

The results of the Upper and Lower Primary examinations are compared below:—

	Number of passes	
	1889-90	1890-91.
Upper Primary ...	7,026	7,202
Lower Primary	10,014	9,917

In consequence of the closure of schools for Census operations, the examinations had to be postponed from January and February, *viz.*, the usual period

when they are held, to April and May. As remarked above, the Upper Primary examination has been reorganized and reconstituted. I am persuaded that the new scheme will prove a great stimulus to primary education. Under the old system, by which Inspectors of Schools and Deputy Inspectors conducted the examination, whenever they happened to visit a school, there was no uniformity of standard. Further, the examination was not popular, as it led to nothing. The Upper Primary examination is the end of their educational career for the majority of students in this country. As such, it should have some value and importance attached to it. Under the new scheme the examination will be held at centres by a Board of Examiners, which will lead to greater uniformity of standard. It has also been made more popular by being constituted the test for the following :—

(*a*). Admission into a Vernacular Middle school or 1st English class of an Anglo-Vernacular school.

(*b*). Admission into Government service for minor appointments.

(*c*). For Middle Scholarships.

(*d*). The 4th Standard of results aided schools.

As already observed, the most important change has been the making of the examination the test for admission into the 1st English class of an Anglo-Vernacular school, the result being the prolongation of the primary vernacular course from 3 to 4 years. This will have the effect of checking the premature-forcing of boys into the study of English before they have mastered their own vernacular, and will thereby discourage "cram."

Middle school Scholarship Examination

60. The results of the Middle school Scholarship examination are as follows :—

Circle	Number of candidates.	Number of candidates who took up Drawing	Number of candidates who took up Physical science.	Number of candidates who took up Agriculture	Number passed in Language and Grammar	Number passed in Arithmetic.	Number passed in History and Geography	Number passed in Sanitation.	Total number passed	Number of Scholarships.
Southern ...	312	309	111	111	203	177	74	115	125	35
Northern ...	237	92	198	229	123	175	75	154	56	26
Eastern ...	216	176	181	196	107	162	52	61	89	14
Total ...	765	577	490	536	433	514	201	330	270	75

The total number of candidates was 765 as against 735 last year. Of these, 270 passed, as compared with 271. 577 took up drawing, 490, physical science, and 536, agriculture, as compared with 543, 389 and 268 candidates in these subjects, in the previous year. It is a satisfactory feature that the number of candidates in agriculture has exactly doubled, and that there is an increase in the number of those who took up drawing and physical science.

Results of the examination for prizes in Agriculture and Physical Science.

61. The results of the examination for prizes in agriculture and physical science are detailed below :—

Name of District.	Physical Science.			Agriculture.		
	Number presented.	Number passed.	Percentage.	Number presented.	Number passed.	Percentage.
Nagpur ...	18	10	55	18	5	28
Bhandara .	10	1	10	11	6	55
Chanda ...	63	35	55	63	37	59
Wardha ...	...	...	...	38	25	66
Balaghat ...	16	13	87	10	9	90
Chhindwara ...	66	29	46	75	59	78
Betul ...	22	8	36	22	9	40
Seoni ...	60	29	48	60	48	80
Jubbulpore ...	111	73	65	90	63	70
Saugor ...	101	89	88	90	83	92
Narsinghpur ...	44	17	38	62	28	45
Damoh ...	74	31	42	74	43	58
Hoshangabad ...	112	71	63	65	49	75
Mandla ...	5	...	...	26	24	92
Nimar ...	13	8	61	13	5	38
Raipur ..	400	177	44	490	257	52
Bilaspur ...	45	28	62	45	34	75
Sambalpur ...	29	17	59	29	20	69
Total ...	1,189	636	53	1,281	804	62

In agriculture, 1,281 candidates appeared, of whom 804, or 62 per cent., passed. Last year 1,177 candidates were presented, and 868 passed. In physical science 1,189 candidates appeared, and 636, or 53 per cent., were successful, as against 1,169 candidates and 410 passes, in the previous year.

Native States.

62. The following table compares the state of education in the Feudatory States :—

Feudatory States.	Area.	Population.	Schools.		Pupils.		Increase.		Decrease.	
			1889-90.	1890-91.	1889-90.	1890-91.	Schools	Pupils.	Schools	Pupils.
Raigarh ...	1,486	167,756	10	11	586	634	1	48	..	219
Sarangarh ...	540	83,230	15	15	1,150	931	...	...	...	17
Patna ...	2,399	329,855	22	22	1,492	1,475	...	...	...	18
Kalahandi ...	3,745	325,993	20	20	1,185	1,167	...	...	...	...
Kawardha ...	887	91,783	9	16	501	863	7	362	...	...
Sakti ...	115	25,369	3	3	189	196	...	7	...	...
Khairagarh ..	940	181,132	7	8	328	458	1	130	...	...
Rajnandgaon...	905	184,112	8	21	476	1,350	13	874	...	...
Chhuikhadan...	174	36,131	1	1	94	104	...	10	...	...
Bamra ...	1,988	104,393	...	13	...	338	13	338	...	...
Rehrakhol ...	833	20,334	...	2	...	73	2	73	...	...
Sonpur ...	906	195,532	...	11	...	474	11	474	...	...
Bastar ...	13,062	310,840	...	7	...	297	7	297	...	...
Kanker ...	639	82,149	...	5	...	360	5	360	...	...
Total ...	15,557	2,138,909	95	165	5,801	8,720	60	2,919	...	..

It will be seen from the above that there has been an increase of 60 schools and 2,919 pupils. The figures of such only of the above States as are under regular inspection have been included in the annual returns. The statistics of the following States, accordingly, find no place in our returns :—

			Schools.	Pupils.
Rajnandgaon	...	...	21	1,350
Rehrakhol.	...	...	2	73
Bamra	...	..	13	338
Sonpur	...	...	11	474
Kanker	...	..	5	360
Bastar	...	...	7	297
		Total ...	59	2,892

Mr. Mitchell, the Inspector of Schools, Eastern Circle, visited all the Feudatory States, including the large and important States of Kalahandi and Bastar, which had never before been visited by an Inspector of Schools. He has taken steps to place their educational systems on a sound footing. The main difficulty has been the obtaining good teachers. To meet this, Mr. Mitchell has arranged for the establishment of a Vernacular Middle school at the head-quarters station of each State, in which men may be trained as masters. This system is now in full working order, and will, I am persuaded, be productive of satisfactory results. The large and important State of Bastar, with an area of 13,062 miles and a population of 196,248, which had hitherto been outside the pale of education, has been visited by Mr. Mitchell, and 7 schools have been opened. He points out that, until an adequate staff of Deputy Inspectors is supplied, it will be impossible to expect any real progress in the Feudatory States. I intend to take up the question of strengthening the Inspecting staff in the current year.

SECTION V.—School Education—Special.

Training Schools for Teachers

63. The following table gives the comparative statistics of these Institutions :—

	Names.	Number of students at the close of the year.		Students certificated or promoted.		Average daily attendance.		Total cost.		Cost of each pupil.	
		1889-90	1890-91	1889-90	1890-91.	1889-90.	1890-91.	1889-90.	1890-91.	1889-90.	1890-91.
								Rs.	Rs.	Rs. a. p	Rs. a. p.
For men.	Secondary schools for teachers.	16	14	13	25	13	13	1,519	2,304	108 8 0	170 15 4
	Nagpur ...	27	29	30	25	27	25	6,959	7,825	248 8 6	289 13 3
	Jubbulpore ...	86	101	62	41	80	76	10,832	10,529	119 0 6	126 13 8
	Raipur ...	48	52	11	33	37	42	4,778	4,641	106 2 10	92 13 1
	Sambalpur ...	10	10	10	10	10	10	800	300	80 0 0	30 0 0
	Total ...	187	206	126	134	167	166	24,888	25,599	132 6 1	139 2 0
For women.	Jubbulpore ...	20	19	2	4	17	21	5,542	6,104	263 14 6	254 5 8
	Grand Total	207	225	128	138	184	187	30,430	31,703	145 9 6	152 6 8

The number of students enrolled has increased from 207 to 225. 138 students obtained certificates, as compared with 128 in the previous year. The cost of educating each pupil has increased from Rs. 145 to Rs. 152, which is accounted for by the larger salary drawn by the European Superintendent of the Nagpur Training Institution.

Nagpur Training Institution.

64. Mr. Spence, the new Superintendent of the Training Institution, appointed by the Secretary of State, took charge of his duties in August last. Two sets of students of the class for the training of Secondary school teachers passed their course of training during the year. At the examination of July 1890, 13 passed out of 15 presented, and at the examination of January 1891, 12 out of 13 passed. These results reflect credit on Mr. Dole, the late Superintendent, and on Mr. Spence. The results of the certificate examination of the vernacular department of the institution were as follows :—

	Presented.	Passed.
3rd grade, 2nd class	9	9
3rd grade, 3rd class	17	16
	26	25

The examination was a united test of the 3 Provincial Normal schools, and the results were very favourable to the Nagpur Institution, 9 Nagpur students standing amongst the first ten from the whole Provinces. 58 masters from rural Primary schools were sent in for a short course of special training in drawing, Kindergarten occupations and manual training. Their progress was generally satisfactory. The wants of the institution are improved accommodation and a proper practising school. I have submitted proposals for supplying these wants in my letter No. D-1258, dated the 11th April 1891, regarding the establishment of a Technical Institute, of which the training institution would be a branch. Kindergarten occupations and manual training are well taught in the school. The samples of wood-work and modelling in clay and card-board sent up to the Jubbulpore Exhibition were amongst the best in the Provinces. The results of the Bombay School of Art examination were unsatisfactory, 2 candidates only, out of 43 presented, obtaining 1st grade certificates, and 3, out of 14, 2nd grade certificates. The general management and discipline of the institution are creditable to Mr. Spence. The boarding house is most insanitary and unsuitable, but I have not succeeded in obtaining a better one.

Jubbulpore Normal School.

65 There were 100 students on the rolls in this school, as compared with 86 last year.

The results of the teachers' certificate examination were as follows :—

	Presented	Passed
3rd grade, 2nd class	21	14
3rd grade, 3rd class	43	27
	64	41

This cannot be regarded as satisfactory. The Superintendent, Mr. Mahadeo Yeshwant Dole, has taken the greatest pains in encouraging the various branches of manual training. The excellence of the samples of wood-work and modelling in clay and card-board shown at the Jubbulpore Exhibition were

sufficient evidence of the progress in the subject made by the students. Kindergarten occupations are also well taught. In the Bombay School of Art examination, 3 students passed in the 1st grade. The students have made good progress in drill and gynmastics, under the new Instructor. The success of the institution is mainly due to the energy and industry of the Superintendent, Mr. Mahadeo Yeshwant Dole.

Raipur Normal School.

66. The strength of the school has increased from 48 to 52, owing to the admission of pupils for training from the schools in the Feudatory States. The results of the Teacher's Certificate examination show a marked improvement on those of last year, 33 students passing, as compared with 11. Drawing is taught by a competent master, but the results of the Bombay School of Art examination were most unsatisfactory. The Kindergarten system is as well taught as in any school of the Central Provinces, and some of the branches of manual training have been introduced. The more important branch of that subject, *viz.*, wood-work, will be taught, as soon as I can obtain the services of an Instructor. Object lessons receive attention, and drill and gymnastics are taught by a special Instructor. The boarding house is kept in good order.

Sambalpur.

67. There is no special training school for Uriyas. 10 stipendiary scholarships are, annually, given for those who wish to qualify as teachers. For each pupil who qualifies, a bonus of Rs. 30 is awarded to the master from whose school he has passed. Ten bonuses of Rs. 25 each are given annually for the training of non-stipendiary students. The Sambalpur students were for the first time admitted to the Provincial examination for Teachers' certificates. 10 pupil teachers and 17 non-stipendiary teachers obtained certificates.

Female Normal School, Jubbulpore.

68. The average number enrolled was 21, against 17 last year. In addition to these, 21 mistresses from rural schools were sent in for a short course of training in drawing and Kindergarten. 19 students were on the rolls at the end of the year, of whom 8 were wives of students attending the Male Normal school. The students came from the following districts:—

Saugor.
Damoh.
Narsinghpur.
Hoshangabad.
Jubbulpore.

Nimar and Mandla in the Northern Circle, and none of the Hindi districts of the Southern or Eastern Circle were represented. Five candidates appeared for the certificate examination, of whom 4 passed. Drawing has been regularly taught by one of the masters of the Male Normal school. Much progress has been made in Kindergarten instruction. Needle work receives considerable attention, and the Lady Superintendent has succeeded in overcoming native prejudices, and inducing her students to sing action and school songs. The progress made in singing was very encouraging. The practising school requires strengthening.

69. The number of students in the institution at the end of the year was as follows :—

Agricultural Class, Nagpur.

Senior class	...	7
Junior class	...	22
Total	...	29

The average attendence was 27.

As regards caste, 25 are Brahmins, 2 Sudras, one a Mahomedan, and one a Native Christian. Two students have passed the Matriculation examination, and the rest the Middle school examination.

The Final (2nd year) and Annual (1st year) examinations were held in March. The examinations were conducted by Mr. Fuller himself assisted by Mr. Craddock, C. S., Docter Robertson, Professor of the Hislop College, and others. Six students passed the final examination and 15 the annual examination. The Silver Medal offered by Mr. Fuller for the best student in the final examination was gained by T. Gopalswamy. All the successful students in the senior class have obtained employment as Revenue Inspectors.

The expenditure was as follows :—

	Rs.	a.	p.
Principal	600	0	0
Lecturer on Agriculture and Surveying ...	1,194	13	5
Servants	83	12	0
Maps, books, buildings, repairs and other contingencies	280	7	3
Chemistry and apparatus	491	6	4
Total ...	2,650	7	0

The average cost of educating each pupil was Rs. 77-15-3, as compared with Rs. 75-0-3 in the previous year.

The subjects of instruction were as follows :—

Theory and principles of Agriculture.
Elementary Chemistry.
Botany.
Geology.
Elementary Anatomy, Physiology, and the elements of Veterinary Surgery.
Land Surveying.
Drawing.

The Principal reports that much interest was taken by the students in practical work. The junior students practised ploughing and bakharing throughout the rainy reason, and at the end of the rains sowed their rabi crops

on the plots assigned to them. The senior students sowed both kharif and rabi crops on their own plots. Some of the plots turned out as fine crops as any in the neighbourhood grown by ordinary cultivators. Much damage was, however, done to some of the plots by cattle, but nothing can be done to prevent this, unless the plots are provided with a fence, which would involve considerable expense. The plots cultivated by the students themselves extended over 13¼ acres. The money realised by the sale of the crops, *viz.*, Rs. 80, was distributed amongst the students. A small plot of ground was set apart for the purpose of practical gardening, and the Principal states that much interest was taken by the students in this work. The produce they consumed themselves. The suggestion of the Revenue and Agricultural Department that the students should keep labour journals and cultivation books was carried out. The physical training of the students was not neglected. They were regularly exercised on the horizontal and parallel bars once or twice a week. A suitable boarding house has been provided. The Veterinary Dispensary attached to the institution has been successfully worked during the year. The number of cases under treatment were as follows :—

Horses	...	20
Cattle	...	100
Dogs and other animals	...	40
Total	...	160

143 cases were discharged as cured. In addition to the above, 2 horses were examined for certificates of soundness, and 6 *post mortem* examinations were held. The Principal writes as follows:—"It is to be regretted that so few "animals came for treatment, though no charge is made for medicines for "animals whose owners are in a position to pay; but the people of this country "have a strong prejudice against European medicines and treatment of diseases, "until they recognize by experience the advantage thereof." Adequate arrangements have been made for the training in the elements of Agriculture of the class of village schoolmasters, the establishment of which was sanctioned during the year. An additional instructor has been entertained, and a building erected. The first batch of students will join the institution in June 1891. Dr. Volkler, Consulting Chemist to the Royal Agricultural Society of England, visited the class during the year, and has recorded an interesting note, of which the following is an abstract:—"I must express my pleasure and satisfaction in "seeing this the, in my opinion, best agricultural class I have met with in my "Indian journeys; I have little doubt that a very great measure of the success "attending the class is due to the fact that Mr. Fuller insists upon every student "doing the practical work of the farm with his own hands. The assigning to "every student of a plot of fair size, which he is to cultivate himself, and the "giving to him of the crops grown, must act as a useful incentive. The museum "and laboratory are at present on a small scale only, but are begun well, and "I was pleased to see how careful a selection both of specimens and of books "had been made. All was in miniature, and all good. The teaching impressed "me favourably, those in charge of it being evidently intelligent, well trained "men. The course of instruction is capital, and has the great merit of not "being confused with too many subjects."

The Engineering Class

70. The class has entered on the 3rd year of its existence. The number enrolled at the end of the year was as follows :—

Senior Division	...	...	9
Junior do.	...	...	4

The class was under the charge of Rao Sahib D. S. Sathye until the 1st August, when Mr. Prayag Dass, a former student of the Roorkee College, took charge of it.

The cost of the class last year was Rs. 4,258. The figures of the current year are as follows :—

			Rs.
Teachers and servants	...	...	2,811
Contingencies	...	...	85
	Total	...	2,896

The difference is mainly due to the fact that Mr. Prayag Dass received a smaller salary than his predecessor.

The course of instruction extends over two years, and embraces the following subjects :—

A.— Mathematics.

1. Arithmetic, the whole.
2. Algebra.
3. Trigonometry, up to measurements of angles.
4. Mensuration, Lines, Surfaces and Solids.

B.— Engineering.

(1). Levelling (including contouring) Surveying, Traversing, Plane-tabling.
(2). Drawing, portions of the Normal school course, with drawing of plans and elevations of simple buildings, bridges and culverts.
(3). Road making.
(4). Brick and tile making.
(5). Varieties of stone and wood as used for construction.
(6). Elements of simple construction.
(7). Carpentry.

9 students appeared for the final examination for certificates held in July last. Of these, 2 were granted certificates as Sub-overseers, 6 students received certificates as Sub-surveyors, and one was expelled for copying. All the successful students have obtained employment. Two were posted permanently as Sub-overseers in the Department of Public Works; two were given temporary appointments as Sub-overseers in the same Department, and the other four were employed at Surveyors in the Nagpur Drainage Scheme. One of the tempo-

rary Sub-overseers has since been employed by the Bilaspur Municipality. The junior division was examined in July, and all of them were promoted to the senior division. The instruction has been thoroughly practical. With this object, the classes were taken out to inspect all the important works in progress in Nagpur, and difficult points were explained to them. The Superintendent proposes, in future years, to take his students to inspect works in progress in other parts of the Provinces. Surveying, a weak point in the classes of last year, received more attention. In drawing also, satisfactory progress was made. Several bridges and buildings in and outside Nagpur were measured and drawn by the students. The class is, I regret to say, not as popular as so important and useful an institution should be. Its main object is to train candidates for lower subordinate appointments in the Public Works Department, and for employment under Local Bodies, Wards estates, and the like. The subordinate officers at present employed in the Public Works Department are, I believe, not found to be generally satisfactory, because, being aliens from another Province, they are out of sympathy with the people, and are constantly applying for leave to return to their homes. The institution should, if properly worked, furnish the Public Works Department with an adequate supply of good subordinates, to whom the above objections would not apply. Further, there is a constant demand for trained Engineers not only by Local Bodies, especially Municipalities, but also by private industrial firms. There should, therefore, be an ample field for the employment of candidates trained in the Engineering class.

The general progress of the class during the year is highly creditable, to Mr. Prayag Dass, the Superintendent.

Law Class, Jubbulpore.

71. There were 32 students on the rolls of the class, as compared with 31 in the previous year. The percentage of attendance was 79, and the fee receipts Rs. 549. The fee income should amount to Rs. 1,152 at the rates charged, *viz* Rs. 3. The Principal reports that many of the students are in arrears, which, however, will be collected before the certificates of attendance are granted. The course of lectures given during the year embraced the following subjects:—

Hindu Law.
Mahomedan Law.
Jurisprudence.
Equity.
Contracts.
History and constitution of the Courts of Law and Legislative authorities in India.
Transfer of Property Act.
Criminal Law and Proceedure.

Law Class, Morris College.

72. The number of students on the rolls at the end of the year was 57. 98 lectures were deliverd during the year, on the subjects mentioned above, by Mr. J. Fraser, Barrister at Law, and Mr. Apurwa Krishna Chaudhari, B. L., the Law Professors. The average number of students present at each lecture was 40. The fee receipts amounted to Rs. 1,860, half of which, *viz.* Rs. 930, were credited to Government.

Of 6 students sent up for the B. L. Examination of the Calcutta University, 4 passed. 2 students competed successfully for the local Pleadership examination.

Carpentry Classes

73. The particulars of these classes are given in the following table :—

	Number enrolled.		Average daily attendance.		Expenditure.	
	1889-90.	1890-91.	1889-90.	1890-91.	1889-90.	1890-91.
					Rs.	Rs.
Jubbulpore ...	8	10	7	8	517	679
Sihora ...	20	35	10	25	518	108
Babai ...	29	42	15	36	304	236
Seoni-Malwa ...	24		20			
Singhpur ...	50	90	30	68	240	228
Barha ...	40		27			
Katangi ...	27	23	18	14	182	108
Patharia ...	25	28	15	23	164	144
Nagpur ...	7	9	6	6	2,366	566
Ramtek ...	18	19	8	8	228	133
Umrer ...	31	32	10	9	263	123
Burha ...	19	22	14	16	162	130
Seoni-Chhapara ..	22	23	16	17	381	100
Chhindwara ...	21	15	18	12	169	101
Total ...	341	348	214	242	5,494	2,656

These classes, so far as instruction in carpentry as a trade is concerned, have practically ceased to exist. A great number of them had degenerated into local workshops, from which tables, chairs, &c., were supplied to the neighbourhood, the work being done by the Carpenter masters, not by the boys. This system has been put a stop to. The Carpenter masters are being instructed in the different branches of manual training, of which wood-work is one, and will teach the subject, as soon as they are competent to do so.

SECTION VI.—Female Education.

Comparative statement of girls' schools.

74. The comparative statement of the education of girls, given in Appendix I, is abstracted below:—

Class of Schools.	Schools.		Scholars.	
	1889-90.	1890-91.	1889-90.	1890-91.
Secondary schools	6	7	280	238
Primary schools	126	128	5,299	5,561
Total ...	132	135	5,579	5,799

From the above it will be seen that schools have increased by 3 and pupils' by 220, or by over 3 per cent. The above figures do not include girls studying in boys' schools, the number of which is 1,817. In the Chhattisgarh Division alone, the number of such pupils has more than doubled during the year. The movement in the direction of technical education has extended to female education, and has considerably popularised and improved it. The instruction has been varied by the introduction of Kindergarten, action songs, and, in a few places, drawing, and by the encouragement given to needle work and knitting on the frame. The latter is taught in every school, and is very popular. Swings, as a form of physical exercise and healthy recreation, have been provided in some schools. As observed in last year's Report, one of the main obstacles to female education is the obtaining good mistresses. The majority of our girls' schools are under masters, who are ignorant of the most essential subject in a girls' school, *viz.*, needle work. The number of teachers supplied by the Jubbulpore Female Normal—our only Female Training school—is not commensurate with the demand for female teachers. Proposals have been made to train a few mistresses for Marathi schools in the Fort girls' school, Nagpur. The scheme is under consideration.

Jubbulpore Zenana Mission.

75. The ladies of the Mission Society's Zenana Mission, Jubbulpore, manage 8 girls' schools in Jubbulpore, and 2 in the adjoining town of Garha. The schools contain about 300 girls. In addition to regular school work, the ladies are also engaged in zenana teaching. 150 houses were visited during the year; the average number on the rolls being 166. Upwards of 20 women are taught English. A Government grant of Rs. 100 per mensem is given for zenana work, besides the grants to the schools.

Nagpur Zenana Mission.

76. This is a branch of the Free Church of Scotland Society for Female Education. There is a boarding school, and 3 girls' schools in the city of Nagpur. The ladies of the Mission also engage in zenana work. The Inspector of Schools reports favourably on the work done by the Mission during the year.

77. There are also zenana agencies at Hoshangabad, Sohagpur, Harda, Bhandara, Bilaspur and Seoni (Chhapara). All of these are engaged in school work as well as in home education. The Hoshangabad Mission is most favourably reported on.

Other Zenana agencies.

SECTION VIA.—EUROPEANS AND EURASIANS.

School for Europeans and Eurasians.

78. The statistics of these are thus shown :—

No.	Name of school.	Number of boys.	Number of girls.	Total.	Average number on roll.	Average daily attendance.	Matriculated.	Middle School.	Upper Primary.	Lower Primary.	Monthly grant.
											Rs.
1	St. Francis deSales school, Nagpur...	191	...	191	206	178	4	11	14	25	350
2	Bishop's school, Nagpur ...	67	60	127	133	106	2	2	8	6	190
3	St. Aloysius school, Jubbulpore ...	67	...	67	72	56	..	3	6	4	160
4	Convent school, Kamptee ...	34	62	96	105	93	...	...	3	10	190
5	Orphanage school, Kamptee ...	14	10	24	18	17	...	..	...	4	50
6	Convent school, Nagpur ...	...	95	95	85	66	...	...	3	8	105
7	Do. Jubbulpore ...	8	124	132	143	130	...	...	6	6	270
8	Christ Church Girls' school, Jubbulpore. ...	14	56	70	66	49	...	...	2	3	100
9	Do. do. Boys' do. do.	32	...	32	35	27	...	3	7	1	90
10	Railway school, Khandwa ...	35	36	71	55	44	...	...	3	3	30
11	Do. do. Harda ...	20	20	40	35	23	...	...	...	3	30
12	Loretto Convent, Saugor (unaided)...	...	...	...	...	...	...	...	...	...	...
13	Railway school, Dongargarh ...	9	8	17	8	7	...	...	...	..	...

The average number enrolled was 961, as compared with 914 last year, the number of schools being the same. One school, *viz.*, the Loretto Convent school, Saugor, disappears from the list, its numbers having so far declined during the year that the Manager, being in doubt as to whether it could be continued, did not submit returns. One school, *viz.*, the Railway school at Dongargarh, has been added to the list. Attempts have been made to give education a more practical turn. Drawing is taught in four schools. Kindergarten instruction, with action songs and musical drill, has been introduced with success, especially in the Convent school, Nagpur, and the Christ Church school for girls, Jubbulpore. Domestic economy is taught in girls' schools. Attention has been paid to physical training, especially in the St. Aloysius school, Jubbulpore. Object lessons and elementary science are generally well taught. A technical side, *viz.*, carpentry, has been added to the Orphanage, Kamptee, but the want of funds for a workshop is an obstacle to its future development. The boarding accommodation is generally adequate, except in the St. Aloysius school, Jubbulpore, in which, however, improvements and extensions are contemplated.

The following are extracts from the report of the Inspector of European Schools:—

79. "There was a slight decrease of pupils at the end of the year, but the average number on the roll and attendance have both increased. The results of the annual examination were satisfactory, and I consider that with two exceptions, the Infant school and Physical training, all the arrangements were very good. The Infant school is the weakest part of the institution, the school-room being ill-provided with apparatus, and the instruction too bookish. Physical instruction requires more systematic attention; and this will now be possible as a gymnasium is under construction, for which a grant-in-aid has been sanctioned by the Administration. As a whole, however, this school is doing excellent work."

St. Francis de Sales School, Nagpur.

80. "Towards the end of the year the number of pupils declined, but for the whole year the figures are favourable. The school continues in good order, and the results of the public competition examinations and the annual inspection show that the standard of previous years is maintained. For the first time two pupils passed the Entrance examination, one of them, a girl, being placed in the 1st grade. The Infant school requires a further development of the activities of the children, and physical training should have more systematic attention. Generally speaking the school is doing work; it would do better if the Managers were not cramped for funds."

Bishop's School, Nagpur.

81. "The annual examination of this school showed very decided progress in drawing, physical instruction, elementary science, vocal and instrumental music, and Hindi. In general instruction the standard of former years was maintained. Considering the material and the position the pupils will hereafter occupy, the education afforded is suitable. As a boarding school attracting pupils from out-stations, this institution has not yet been successful, chiefly owing to defective accommodation. Efforts are now being made to remedy this defect."

St. Aloysius School, Jubbulpore.

82. "Numbers and attendance have declined in this school, but the instruction remains generally good. The results of the Scholarship examination deserve mention, 3 passing in the Middle and 7 in the Primary grade; one of the former being the only candidate placed in the 1st grade. I have to note again that the Managers do not readily adopt the suggestions of the Department; and after the last annual inspection, it was necessary to suspend the grant till my suggestions regarding object teaching were adopted. There would probably be less difficulty in this respect if the Committee were consulted; but practically it is in abeyance. I am glad to add that the drill and gymnastics of the boys are excellent."

Christ Church School for Boys, Jubbulpore.

83. "This school maintains a high character for its tone and discipline, for order, for the neatness of written exercises, for its excellent needle-work, and its sanitary arrangements. It has not hitherto been successful at the Scholarship examination, but better results are expected in future. There was a large decrease in number at the close of the year, of which no explanation has been furnished; otherwise, I consider the school well managed and carefully taught. It is one of the few schools where the teachers of the higher classes carefully prepare the lessons they have to teach The girls, the majority of whom are boarders, are well cared for, and look healthy and happy. In the Infant school there has been considerable progress in developing the activities of the children."

Convent School, Kamptee.

84. "The feature of this institution is its Infant school. The school-room is large, cheerful and well furnished; sheets and prints decorate the walls, and instruction is facilitated by a gallery. The children engage with spirit and evident pleasure in action songs and musical drill; and paper folding, plaiting and pattern pricking, if more sedentary occupations, are not less attractive and engaging, and the little ones are evidently proud of their work.

Convent School, Nagpur.

"The creative and distinctive tastes of the children are exercised in architectural model building. The Infant school is thus a very pleasant place for the little ones. Reading, writing and arithmetic receive due attention. In regard to the Infant Department, this school is a model: in other respects it is in fair order and is improving."

The Convent School, Jubbulpore.

85. "This is a popular and well conducted day and boarding school. It and other girls' schools require some system of calisthenics, agreeable to parents and suited to the condition of the school, which in the main school would take the place of musical drill, marching, action songs, and, generally, the activities of the Infant school. The number of pupils at the end of the year was less than last year by 16, but the average number for the year and the attendance were larger. The results of the prescribed examinations are not quite so favourable as last year, but this I consider an accidental variation, and I noticed no decline when I inspected the school. Indeed one girl passed the Final standard for High schools, and the general result was satisfactory."

Christ Church School for girls, Jubbulpore.

86. "The Infant Department of this school has much improved, owing to the introduction of Kindergarten, action songs and musical drill. It is brighter and more attractive, the teaching is more spirited and sympathetic, and the means by which the activities of the children are exercised tend to the development of all their faculties. While the Infant school has improved, the standard of instruction in the main school has been maintained: drawing has been introduced, object lessons are well taught, and needle work has improved. In all these schools for Europeans I attach the utmost importance to the Infant schools, as on their proper management depends, to a great extent, the progress of the higher classes."

The Orphanage, Kamptee.

87. "There are more pupils in the orphanage than last year. The number is limited by the state of the funds and by the accommodation. The instruction has, I think, been improved by giving it a more practical turn during the year. Carpentry is taught to the boys for 3½ hours each day, and less time than formerly is given to books. The boarding arrangements are good; drill is taught to both boys and girls; and a garden is cultivated by the children themselves. The institution is well managed, and the education imparted to the children suitable."

The Railway School, Khandwa.

88. "The Railway school, Khandwa, has largely increased, and the instruction is fair. Two pupils passed the Primary scholarship examination, and one of them stood high enough to gain a scholarship."

The Railway school, Dongargarh.

89. "The opening of the Bengal-Nagpur Railway to Calcutta has caused an increase of pupils in the Dongargarh school. When I visited it in September it was in fair order. Bilaspur is fast becoming a centre of Railway population, and a school is about to be opened there."

Railway school, Harda

90. "The Harda school has developed and improved during the year."

SECTION VII B.—Mahomedans and Aboriginal races.

Schools for Mahomedans and Aboriginal races.

91. Particulars regarding the progress of education amongst Mahomedans and the aboriginal tribes are given in paragraph 7 above. The number of Mahomedans attending school has increased from 8,666 to 8,794 or by 1·4 per cent.

There is a slight increase in the number of Gonds and other aboriginal tribes under instruction, viz., from 1,654 to 1,688. The Census office is not yet in a position to furnish the number under each caste or race, in the current year. I am, therefore, unable to compare the percentage of school-going-age population according to caste or race. I may, however, add that the percentage of Mahomedan boys of school-going age attending school last year was 39·5, and of girls 1·6. Gonds and aboriginal races were represented by 1·08 per cent. As observed above, the neglected state of education in the Feudatory States accounts, in a measure, for the poor attendance at school of the aboriginal races. Now, however, that the Inspector of Schools, Eastern Circle, has visited all the Feudatories and has taken steps to improve their educational systems, I anticipate greater progress in the education of the aborigines. The proposed strengthening of the inspecting agency in the Feudatory States will also lead to better results. Three new schools for Gonds have been opened in the Betul District, and several Government schools have been established in the Sironcha Tahsil, which it is hoped will be attended by Koi boys. The Dher school at Hinganghat continues to make satisfactory progress, and there are four results aided schools for this class of the community in the Chanda District. As remarked in last year's Report, the rule in the new results grant Code which offers aid at 50 per cent. higher for aborigines and backward races, should stimulate the education of these classes.

SECTION VII C.—Native Chiefs.

The Rajkumar College, Jubbulpore.

92. The names and ages of the young Chiefs attending the school, and the estates to which they belong are given below :—

No.	Names of boys.	Age.	Estates.
1	Ramchandra Deo, ...	19	Patna.
2	Niranjan Prashad	19	Khitola.
3	Drigpal Shah	14	Pagara.
4	Devi Prashad	17	Sihora.
5	Raghuraj Singh	12	Pandaria.
6	Vishun Datt	15	Sihora.
7	Bhanu Pratap Singh	17	Imjhira.
8	Niazuddin Khan	20	Khujji.
9	Indrapal Singh		Pendra.
10	Chhatrapal Singh		Pendra.

The school is entirely self-supporting. The expenditure was Rs. 3,340, and the cost of educating each pupil Rs. 334. The number on the rolls is the same. Two pupils left the school during the year, and two were admitted. The average attendance is about the same. Three of the students reading in the Collegiate school appeared for the Entrance examination, and two were successful. One pupil passed the Middle School examination. Mr. Young, the Superintendent, reports that the health of the pupils was excellent, a fact which he attributes to regular hours, regular meals, and regular physical exercise. Physical training continues to receive attention. The boys ride, practise gymnastics, and play lawn tennis and rounders daily. The school is well managed, but its range is limited, for it can hardly be said to serve the general purpose of an institution for the education of the Native Chiefs of the whole of the Provinces, seeing that so few pupils came from Chhattisgarh, where most of the Feudatory States are to be found. At present the Chhattisgarh Chiefs allow their children to grow up almost in ignorance, or support so-called Rajkumar schools of their own, which are worse than useless. Possibly the new branch railway from Bilaspur to Katni, which considerably shortens the journey to Jubbulpore, may induce those Chiefs to send their sons to the Rajkumar school, Jubbulpore.

SECTION VIII.—The Book Depôt and Press.

Book Depôt purchase, sale and stock.

93. The number of books bought and sold, their value, and the number of books on hand on 1st April 1891, may be thus shown :—

Name of Depôt.	Number of books bought.	Value of books and paper bought.	Number of books sold.	Value of books sold.	Number of books on hand on 1st April 1891.	Value of books on hand on 1st April 1891.
		Rs. a. p.		Rs. a. p.		Rs. a. p.
Nagpur ...	242,585	25,207 11 4	167,467	27,982 1 3	469,854	1,08,970 3 7

94. The Book Depôt accounts are as follows:—

District.	Charges.	Amount.	Total.
		Rs. a. p.	Rs. a. p.
Nagpur ...	Establishment—Book Depôt ...	984 8 11	
	Contingencies ...	1,869 14 0	
	Purchase of books (a) ..	25,329 6 5	
	Books received from Press ...	1,110 3 4	
	Establishment—Press ...	911 0 0	
	Contingencies ...	116 15 0	
	Purchase of paper ...	175 7 0	30,497 6 8
Jubbulpore ...	Establishment—Book Depôt..	21 0 0	
	Contingencies ..	264 11 6	285 11 6
	Purchase of books from Nagpur, included in (a) ..	3,773 13 0	
Raipur ...	Establishment—Book Depôt ...	...	
	Contingencies ...	17 0 0	17 0 0
	Purchase of books from Nagpur, included in (a) ...	3,012 12 9	
	Total ...		30,800 2 2
	Nominal Balance ...		2,782 12 9
	GRAND TOTAL ...		33,582 14 11

District.	Receipts.	Amount.	Total.
		Rs. a. p.	Rs. a. p.
Nagpur ...	Book Depôt—The actual sums sent to Treasury were—		
	Cash ..	8,614 7 8	
	Treasury chalans ...	(b)22,192 2 8	
	Prizes ...	58 13 0	
	Libraries ...	293 6 3	31,158 13 7
	Press—Cash sent to Treasuary...	279 12 0	
	Cost of books lithographed and made over to Nagpur Book Depôt. ..	1,110 3 4	
	Treasury chalans on account of "Central Provinces News" ...	1,034 2 0	2,424 1 4
Jubbulpore ...	Paid into the Treasury and remitted to Nagpur by Treasury chalans, included in (b)	7,814 8 8	..
	Credit given by the Curator ...	...	
Raipur ...	Paid into the Treasury and remitted to Nagpur by chalans included in (b) ...	3,491 14 5	
	Credit given by the Curator, Nagpur ...	...	
	Total ...		33,582 14 11

(a). The items of Rs. 3,773-13-0 and Rs. 3,012-12-9 are included in Rs. 25,329-6-5 and are therefore not re-added.
(b). The items of Rs. 7,814-8-8 and Rs. 3,491-15-5 are included in Rs. 22,192-2-8 and are therefore not re-added.

The receipts under the Book Depôt have fallen from Rs. 37,359-5-9 to Rs. 31,158-13-7, or by Rs. 6,200-8-2, which is due in a great measure to the fact that, the branch depôts at Jubbulpore and Raipur having been abolished, purchasers at those places obtained their books from private firms. Press receipts have risen from Rs. 2,156-9-0 to Rs. 2,424-1-4. The amount paid into the outside treasuries on account of subscriptions towards the "Central Provinces News" was Rs. 1,034-2-0, and the arrears of Rs. 216-12-0, adverted to in last year's Report, have been realized during the year from the Superintendent of Stationery, Calcutta. Thus, the net amount of the subscriptions amounted to Rs. 1,250-14-0. The work of the Press, as regards the lithographing of books, also shows improvement; books worth Rs. 1,110-3-4 having been turned out of the Press, as against Rs. 974-12-0 in the previous year.

Books printed in non-Departmental Presses.

95. The books sent to other presses for printing during the year 1890-91 are as follows :—

500	English Agricultural Primer ...	Education Society's Press, Bombay.
5,000	Central Provinces Geography, by Mr. W. Young, translated in Marathi.	Do. do.
5,000	Translation of Fuller's Agricultural Primer in Marathi, by Mr. Dole ...	Do. do.
1,000	Translation of Forest's Hand-book of Gymnastics in Marathi, by Mr. Marathe ...	Do. do.
2,000	Hindi Practical Geometry ...	Chandra Prabha Press, Benares.
10,000	Central Provinces Geography, Hindi, by Mr. Young ...	Do. do.
20,000	1st Hindi book ...	Do. do.
20,000	Hindi Agricultural Primer ...	Do. do.
200	Hindi Forest's Hand-book of Gymnastics.	Do. do.
5,000	Upper Primary illuminated certificates, by Messrs. D. M. Trail, Calcutta.	
2,000	Central Provinces Geography, in Uriya, by Messrs. Thacker, Spink & Co., Calcutta	
4,902	1st Modi book ...	Chitra Shala Press, Poona.
5,505	Marathi pictures, by Mr. Janardhan Wasudeo Godbole.	

BOOKS IN PRESS.

1,000	Hindi Survey book ...	Chandra Prabha Press, Benares.
5,000	Hindi Physical Science ...	Do. do.
20,000	1st Hindi book ...	Do. do.
20,000	2nd do. ...	Do. do.
10,000	Hindi Copy, No. III ...	Do. do.
10,000	Do No. I ...	Do. do.
5,000	Marathi Physical Science ...	Education Society's Press, Bombay.

4	Standards of 30 figures each drawing cards, by Mr. Hardi-kar	...	Chitra Shala Press, Poona.
500	Sets of Hindi Reading sheets	...	Curator's Press, Nagpur.
200	Sets Marathi do. do.	...	Do. do.
1,000	Urdu Copy No. I	...	Do. do.
4,000	Marathi Copy „ II	...	Do. do.
10,000	Hindi Copy „ II	...	Do. do.

Lithographic Press Work.

96. The work of the Lithographic Press is thus shown :—

Hindi.

2,784 Hindi Copy No. II.
30,000 Do. Monthly returns.
1,000 Sheets of weights and measures.
8,600 Results aided school Examination forms.
3,000 Agricultural (Garden) book.

English.

600 Results aided school Bill forms.

Marathi.

4,010 Marathi Copy book No. I.
1,000 Do. Agricultural (Garden) book.

Telugu.

150 Object lessons.

Blank Registers.

120 Large attendance registers.
60 Small Visitors' books.

New vernacular books bought for School Libraries and prize distribution.

97. List of new vernacular books bought for School Libraries and prize distribution :—

Biography.

1. Records bearing on the History of the Bhonsla Raj of Nagpur, in Marathi.
2. Life of Abraham Lincoln, in Marathi.
3. Life of Dr. Swift.

Science.

1. Shrishta Padarth Niyam, Marathi.
2. Sushikshan Kaumudi, in Marathi.

Fiction.

1. Complete translation of the Arabian Nights in Marathi.
2. Suman Vikas, translation of Sadi and Bostan in Marathi.
3. Translation of Gulliver's travels, by Damle, in Marathi, Part IV.
4. Drama, "Shursen prince."
5. Poetry, Ujar Gram, Hindi translation of the "Deserted village."
6. Mathematics, "Vidya Ratna, in Hindi."
7. Miscellaneous—1 "The best prize to children," in Marathi; 2 "Chote Vyapari," in Marathi.

SECTION IX.—MUSEUMS, LITERARY SOCIETIES AND THE PRESS.

Museums.

98. The Museums at Nagpur and Raipur are not under the management of the Department. The number of visitors to the Raipur Museum is reported to have increased from 126,027 to 144,449, or by 18,422.

The Press.

99. The special report on the press has been discontinued, under the orders of the Chief Commissioner. A statement of all the presses that exist in the Provinces is, however, submitted to the Secretariat every year, for insertion in the Administration Report.

Libraries and Literary or Philanthropic Societies.

100. The number of libraries and literary societies is 34, as against 33 in the previous year. The most important are the following :—

(1). The Hitkarni Sabha, Jubbulpore.
(2). The Hit Sabha, Saugor.
(3). The Anjuman Islamia, Jubbulpore.
(4). General Library, Damoh.
(5). Public Library, Burhanpur.
(6). The Anjuman Islamia, Murwara.
(7). The Anjumani-Hami, Nagpur.
(8). The Native General Library, Nagpur.

It is proposed to establish a Central Provinces branch of the Society for the diffusion of sound and wholesome literature in India, both in English and the vernacular. Committees have been appointed at Nagpur and Jubbulpore but no further action has yet been taken, as we are awaiting instructions from the main branch of the Society at Calcutta.

SECTION X.—SOCIETIES AND INDIVIDUALS THAT DESERVE NOTICE.

Societies.

101. The Societies that deserve mention are the following :—

(1). The Free Church Mission, Nagpur.
(2). The Society of St Francis de Sales.
(3). The Convents of St. Joseph, Nagpur, Kamptee and Jubbulpore.
(4). The Zenana Mission, Jubbulpore.
(5). The Free Church Zenana Mission, Nagpur.
(6). The Anjuman Islamia, Jubbulpore.
(7). The Hitkarni Sabha, Jubbulpore.

Revenue Officers.

102. The Extra-Assistant Commissioners who have rendered special assistance are :—

(1). Mr. P. M. Greany.
(2). „ Wasudeo Ballal Kher.
(3). „ Mohan Chandra Chatterji.
(4). „ Rai Bhog Chand.
(5). „ Rai Bahadur Devi Pershad.
(6). „ Mahomed Hussein.
(7). „ Gulam Mustafa.

I have already remarked on the work of Tahsildars, in paragraph 43 above.

District Councils.

103. The work of these bodies has been noted in paragraphs 25 to 42 above.

Private persons and Local Board members.

104. The private persons and Local Board members who have distinguished themselves by their liberality or by active interest in Education are :—

(1). The Reverends D. Whitton and F. Robertson of the Hislop College.
(2). The Reverend Fathers Pelvat and Bonaventure of St. Francis de Sales' School.
(3). The ladies of the Zenana Mission, Nagpur, especially Miss Small.
(4). The ladies of the Zenana Mission, Jubbulpore and Hoshangabad.
(5). Rai Bahadur Bipin Krishna Bose, Secretary to the Morris College Council.
(6). Nirbhe Singh Mandloi of Sobpur, Hoshangabad.
(7). Seth Madan Mohan of Jubbulpore.
(8). Mohan Lal Singhai of Khurai.
(9). Rao Saheb Behari Lal Khajanchi, Jubbulpore.
(10). Maulvi Ali Ahmad of Jubbulpore.
(11). Rai Bahadur Thakur Maharaj Singh, Saugor.
(12). Nand Kishore, Honorary Magistrate, Saugor.
(13). Raghuvar Prasad Dube, Saugor.
(14). Maulvi Imdad Ali of Damoh.
(15). Rao Saheb Narayan Rao, Wardha.
(16). Mr. Venkat Rao Deshmukh of Karanja, in Wardha.
(17). „ Govind Rajaram of Bharaswara.
(18). „ Jagannath Ragho Deshpande of Pipri, in Wardha.
(19). „ Shankar Gangaram of Girar.
(20). „ Bhagwant Rao Hore of Sirpur.
(21) Pandit Jiwan Lal of Bakhari.
(22). Seth Shankar Lal of Chhapara.
(23). Mr. Jawahir Singh of Kahani.
(24). „ Abdul Rahiman of Ashta.
(25). „ Rang Rao Hari of Bhandara.
(26). „ Govind Prasad Dube, Secretary, District Council, Raipur.
(27). „ Khub Lalpuri, Malguzar of Sorar, in Raipur.
(28). Pandit Kriparam of Scorinarain.
(29). Pandit Girdhari Misr of Mungeli.
(30). Babu Harihar Singh, Zamindar of Padampur.
(31). Lal Nrapraj Singh, Zamindar of Barpali.
(32). Mrityunjaya Gadtia, Zamindar of Bijepur.
(33). Rai Bahadur Rao Yado Rao, Bhandara.

Inspectors of Schools and Deputy Inspectors of Schools.

105. I have remarked on the work of these officers in paragraphs 20 to 23 above.

Principals and Professors of Colleges.

106. Mr. Young, Principal of the Jubbulpore College and Superintendent of the Rajkumar School, deserves special notice for his good work and successful management of the institutions under him. Mr. Young commends the work of his staff.

(2). Professor Bhagirath Prasad, B. A., of the Hislop College.

Superintendents and Teachers in schools.

107. The Superintendents and teachers who deserve special mention are the following :—

(1). Mr. R. McGavin Spence, M. A., Superintendent of the Nagpur Training Institution.

(2). „ Mahadeo Yeshwant Dole, M. A., L. C. E., Superintendent, Male Normal school, Jubbulpore.

(3). „ Vinayak Prasad, Superintendent of the Raipur Normal School.

(4). Miss Ross, Lady Superintendent, Female Normal School, Jubbulpore.

(5). Mr. C. D. Mahalaxmiwala, Superintendent of the Agricultural class.

(6). „ Prayag Das, Superintendent of the Engineering class.

(7). „ Raja Babu Datt, Head Master of the Saugor High School.

(8). „ K. N. Basu, M. A., Church Mission High School, Jubbulpore.

(9). „ Kalicharan Bose, Hitkarni School, Jubbulpore.

(10). „ Abdul Hussein, Mian Bhai, B. A., Anjuman School, Jubbulpore.

(11). „ Waman Rao Hardikar, Assistant Superintendent, Normal School, Nagpur.

(12) „ Anand Rao, Drawing Master, Saugor.

(13) „ Sheoram Hari, Drawing Master, Hinganghat.

(14) „ Keshav Rao, Head Master, Middle School, Chanda.

(15) „ Amrit Lal, Head Master, Middle School, Chhindwara.

(16) „ Girdhari Lal, Head Master, Middle School, Seoni (Chhapara).

(17) „ Prem Shankar, Head Master, Middle School, Sohagpur.

I have the honour to be,

Sir,

Your most obedient Servant,

A. MONRO,

Inspector-General of Education,

Central Provinces.

BENGAL SECRETARIAT LIBRARY

TABLES.

EDUCATION—GENERAL TABLE I.

Abstract Return of Colleges, Schools and Scholars in the Central Provinces at the end of the official year 1890-91.

(For details see General Table III.)

Area and Population.				Public Institutions.											
Total area in square miles.	Number of Towns and Villages	Population.		University Education.		School Education, General.		School Education, Special.			Private Institutions.		Grand Total.	Percentage of	Remarks.
				Arts Colleges.	Professional Colleges.	Secondary Schools	Primary Schools.	Training Schools	All other special Schools	Total of public Institutions.	Advanced.	Elementary.			
1	2	3	4	5	6	7	8	9	10	11	12	13	14	15	16
113,279	Towns 66	Males 6,478,435	Institutions. For males	3	...	253	1,430	4	20	1,710	...	...	1,710	3·7 Institutions to No. of towns and villages.	
	Villages 45,788	Females 6,453,912	For females	...	.	7	127	1	...	135	...	...	135	·29	
	Total 45,854	Total 12,932,347	Total ..	3	...	260	1,557	5	20	1,845	..	...	1,845	4·02	
	If Feudatory States are omitted, the number of towns is 62 and of the villages 34,559.	Including Feudatory States. If Feudatory States are omitted the population is 2,157,456.	Scholars. Males ..	212*	...	23,874	80,877	206	530	1,05,699	...	...	1,05,699	10 87 Male scholars to male population of school-going age	One girl.
			Females ...	...	...	238	5,542	19	...	5,799	...	...	5,799	·59 Female scholars to female population of school going age.	To obtain 7,563 girls of Table No V deduct from 5,780 the 131 boys in girls' schools and add 1,914 girls in boys' schools and we obtain 7,563.
			Total ..	212	...	24,112	86,419	225	530	1,11,498	...	...	1,11,498	5·74	

Abstract Return of Expenditure of Public Instruction

[For details see

	Total direct Expenditure on Public Instruction §					
	University Education.	School Education, General		School Education, Special.		Total.
	Arts Colleges.	Secondary Schools	Primary Schools.	Training Schools.	All other Special Schools.	
1	2	3	4	5	6	7
	Rs	Rs.	Rs	Rs.	Rs.	Rs.
1 Institutions ... For Males ...	44,954	2,11,591	2,70,774	25,599	11,071	5,63,989
For Females ...	...	8,424	47,780	6,104	...	62,308
Total ..	44,954	2,20,015	3,18,554	31,703	11,071	6,26,297
2 (a) Percentages* of Provincial Expenditure included in columns 2—16 to Total Provincial Expenditure on Public Instruction ...	4·85	20·38	23·50	866	2·45	59 84
(b) Percentages* of Local Fund Expenditure included in columns 2—16 to Total Local Fund Expenditure on Public Instruction ..	...	26 42	62 72	...	30	89 44
(c) Percentages* of Municipal Expenditure included in columns 2-16 to Total Municipal Expenditure on Public Instruction ..	4 07	51·0	38 80	...	·18	94 06
(d) Percentages of Total Expenditure in columns 2—16 to Total Expenditure on Public Instruction ..	5·11	24 99	36 18	3 60	1·26	71 14
AVERAGE ANNUAL COST† OF EDUCATING EACH PUPIL IN	Rs. a. p	Rs. a. p	Rs. a. p.	Rs. a p.	Rs. a p.	Rs. a. p.
Government Institutions. Cost to Provincial Revenues ...	164 4 0	7 11 6	2 12 4	152 6 8	24 1 3	7 12 9
Cost to Local and Municipal Funds ..	...	4 9 10	1 10 10	...	0 1 0	2 11 1
Total Cost ...	230 6 1	15 11 6	5 10 6	152 6 8	28 3 3	12 14 2
Local Fund Schools‡ .. Cost to Provincial Revenues ...	...	0 7 3	0 9 10	...	...	0 9 3
Cost to Local Funds.	...	3 6 3	2 6 3	...	3 6 10	2 10 1
Total Cost ...	...	4 5 10	3 6 2	...	3 6 10	3 9 10
Municipal Schools. Cost to Provincial Revenues ...	...	3 14 4	0 3 9	...	...	0 9 3
Cost to Municipal Funds ...	...	9 4 5	3 4 1	...	4 8 9	3 14 5
Total Cost ...	...	17 12 7	4 5 9	...	4 8 9	5 10 1
Institutions in Feudatory States ... Cost to Native State Revenues ..	...	6 13 3	1 2 8	...	...	1 7 7
Cost to Local and Municipal Funds .	...	4 12 3	0 13 2	...	...	1 0 8
Total Cost ...	..	13 0 11	2 8 4	...	...	3 1 7
Aided Institutions. Cost to Provincial Revenues ..	28 3 8	6 1 10	1 7 10	...	...	2 3 9
Cost to Local and Municipal Funds ..	23 2 9	1 13 4	0 6 9	...	...	0 11 6
Total Cost ...	202 0 5	17 4 11	4 4 9	...	...	6 15 7
Unaided Institutions... Total Cost ..	...	4 15 7	1 12 11	...	...	2 2 0
All Institutions ... Cost to Provincial Revenues ..	84 9 4	3 4 0	1 0 4	152 6 8	16 12 5	2 0 5
Cost to Local and Municipal Funds..	13 9 2	3 6 8	1 8 4	...	1 2 1	1 15 1
Total Cost ...	214 1 1	9 9 3	3 12 5	152 6 8	20 11 9	5 12 6

TABLE II.

in the Central Provinces for the official year 1890-91.

General Table IV.]

Total indirect Expenditure on Public Instructions.								Total Expenditure on Public Instruction.	Remarks.
University.	Direction.	Inspection.	Scholarship.	Buildings	Special Grants for Furniture and Apparatus.	Miscellaneous.	Total.		
8	9	10	11	12	13	14	15	16	17
Rs.	Rs.	Rs.	Rs.	Rs.	Rs.	Rs.	Rs.	Rs.	
..	26,268	81,858	25,186	73,782	8,531	30,987	2,46,612	8,10,601	
...	...	...	1,458	5,770	289	...	7,517	69,825	
...	26,268	81,858	26,644	79,552	8,820	30,987	2,54,129	8,80,426	
...	7·17	21·85	3·68	6·39	1·02	·05	40 16	100	
...	...	...	6·69	2·93	·94	...	10·56	100	
...	...	...	·95	4·02	·97	...	5 94	100	
...	2·98	9·29	3 02	9 03	1·00	3·51	28·86	100	

* The percentages required for 2 (*a*), 2 (*b*), 2 (*c*), are to be calculated from the figures given in columns 7 (*a*) 7 (*b*), 7 (*c*), respectively, of General Table IV.

† The annual cost is calculated on the *direct* expenditure only. The average cost of educating each pupil is obtained by dividing the direct expenditure by the average monthly number on the rolls during the year.

‡ The average cost of each pupil in Local Fund and Municipal Schools is to be obtained from the figures given in General Table VII.

§ Fractions of a rupee should be omitted, except in the columns showing the average annual cost of educating each pupil.

Return of Colleges, Schools and Scholars in the

Class of Institutions.	Public							
	Under Public							
	Managed by Government.				Managed by Local Fund Municipal Boards.			
	Number of Institutions.	Number of scholars on the rolls on 31st March.	Average number on the rolls monthly during the year.	Average daily attendance.	Number of Institutions.	Number of scholars on the rolls on 31st March	Average number on the rolls monthly during the year.	Average daily attendance.
1	2	3	4	5	6	7	8	9
Arts Colleges.								
University Education. — English	1	87	87	74	...	...	...	...
Total ...	1	87	87	74	...	...	...	...
Secondary Schools.								
School Education, General. — For Boys — High schools ...	4	271	303	251	...	...	...	...
For Boys — Middle school — English ...	35	2,984	2,589	2,107	4	216	186	149
For Boys — Middle school — Vernacular..	26	3,228	3,096	2,339	115	13,022	12,423	8,904
For Girls — High schools ...	...	...	...	..	...	...	...	...
For Girls — Middle school — English ..	...	...	...	...	...	...	...	...
For Girls — Middle school — Vernacular.	1	105	103	89	...	...	...	...
Total ..	66	6,588	6,091	4,786	119	13,238	12,609	9,053
Primary Schools.								
For Boys	135	8,031	8,662	6,487	644	41,989	40,674	27,378
For Girls	28	1,176	1,142	689	36	1,646	1,596	1,087
Total ..	163	9,207	9,804	7,176	680	43,635	42,270	28,465
Schools for special Instruction.								
School Education, Special. — Training Schools for Masters ..	4	206	184	166	...	...	...	...
Do. Mistresses ...	1	19	24	21	...	...	...	...
Schools of Art	...	...	...	...	...	...	...	...
Law Schools	2	89	84	61	...	...	...	...
Agricultural School ..	1	29	34	27	...	...	...	...
Practical Engineering Schools ...	1	13	17	13	...	...	...	...
Industrial Schools ...	9	184	187	120	5	164	162	122
Other Schools (Drawing Schools)..	2	51	50	28	...	...	...	...
Total ...	20	591	580	436	5	164	162	122
TOTAL OF COLLEGES AND SCHOOLS OF PUBLIC INSTRUCTION...	250	16,473	16,562	12,472	804	57,037	55,041	37,640

TABLE III.

Central Provinces for the official year 1890-91.

Institutions.											
management.				Under Private management.							
Maintained by Native States.				Aided by Government or by Local Fund or Municipal Boards.				Unaided.			
Number of Institutions.	Number of scholars on the rolls on 31st March.	Average number on the rolls monthly during the year.	Average daily attendance.	Number of Institutions.	Number of scholars on the rolls on 31st March.	Average number on the rolls monthly during the year.	Average daily attendance.	Number of Institutions.	Number of scholars on the rolls on 31st March.	Average number on the rolls monthly during the year.	Average daily attendance.
10	11	12	13	14	15	16	17	18	19	20	21
...	...	...	...	2	125	123	98	...	...	...	...
...	...	...	...	2	125	123	98	...	...	...	...
...	...	...	...	5	338	424	316	1	9	21	14
3	66	63	41	19	1,143	1,149	917	4	161	161	133
4	273	271	182	30	1,898	1,769	1,308	3	265	270	187
...	...	...	...	...	...	...	...	...	...	...	...
...	...	...	...	5	105	107	100	...	...	...	...
...	...	...	...		28	32	22	..	...	...	...
7	339	334	223	60	3,512	3,481	2,663	8	435	452	334
98	5,967	5,618	3,528	452	20,882	20,292	13,173	101	4,008	3,728	2,482
4	183	173	94	47	2,194	2,125	1,473	12	343	334	201
102	6,150	5,791	3,622	499	23,076	22,417	14,646	113	4,351	4,062	2,683
...	...	...	...	...	...		...	...	...	...	...
...	...	...	...	...	...	...	...	...	...	...	...
...	...	...	...	...	...	...	...	...	...	...	...
...		...	...	...	...	...	...	...	...	...	...
...	...	..	...	...	...	...	...	...	...	...	...
...	...	...	...	...	...	...	...	...	...	...	...
...	...	...	...	...	...	...	...	...	...	...	...
...	...	...	...	..	...	...	...	...	...	...	...
...	...	...	...	...	...	...	...	...	...	...	...
109	6,489	6,125	3,845	561	26,713	26,021	17,407	121	4,786	4,514	3,017

	Class of Institutions.	Grand Total Institutions.	Grand Total of Scholars on 31st of March.	Number of scholars on the 31st March learning. Engl		Vernacular lan-
		22	23	24	25	26
	Arts Colleges.					
University Education.	English		212	212	181	*1
	Total		212	212	181	
	Secondary Schools.					
	For Boys ... High Schools	1	618	602	569	310
	For Boys ... Middle Schools. English	6	4,570	4,586	552	4,475
	For Boys ... Middle Schools. Vernacular	17	18,686			18,686
	For Girls ... High Schools					
	For Girls ... Middle Schools. English		*105	105		
	For Girls ... Middle Schools. Vernacular		*133			133
	Total	26	24,112	5,293	1,121	23,687
ool Edu	*Primary Schools.*					
	For Boys ...	1,43	80,877	2,840	81	80,495
	For Girls ...	12	*5,542	394		5,180
	Total	1,557	86,419	3,234	81	85,675
	Schools for Special Instruction					
on,	Training Schools for Masters	4	206	14	...	192
	Do. Schools for Mistresses	1	19		...	19
	Schools of Art					
School Edu ial.	Law Schools	2	89	89		
	Agricultural Schools	1	29			
	Practical Engineering Schools	1	13		...	
	Industrial Schools	14	348		...	348
	Other Schools (Drawing Schools)	2	51		...	
	Total	25	755	103		559
	TOTAL OF COLLEGES AND SCHOOLS OF PUBLIC INSTRUCTION.	1,845	1,11,498	8,842	1,383	1,09,922
	1.—ADVANCED TEACHING—					
	(a) Arabic or Persian ...					
	(b) Sanskrit ...			...		
	(c) Any other Oriental Classic ...			...		
	2.—Elementary, teaching a Vernacular only or mainly For Boys			...		
	2.—Elementary, teaching a Vernacular only or mainly For Girls					
	3.—European and Eurasian Schools not conforming to Departmental Standards For Boys					
	3.—European and Eurasian Schools not conforming to Departmental Standards For Girls					
	4.—Other Schools not conforming to Departmental Standards For Boys					
	4.—Other Schools not conforming to Departmental Standards For Girls					
	Total					
	GRAND TOTAL	1,845	1,11,498	8,842	1,383	1,09,922

I.—For the purpose of columns 24, 25 and 26, the language through which instruction is imparted should be adopted where the study of English or a Classical or Vernacular language the term classical language in column 25 includes

II.—Mixed schools should be shewn as boys' schools or as girls'

III.—Where boys and girls attend the same school, the number of

IV.—Schools maintained by Native States, even though managed

TABLE III.—(Concluded.)

Classification of scholars on the 31st of March according to Race or Creed.								Number of girls in boys' schools.	Number of boys in girls' schools.	Remarks.
Europeans and Eurasians.	Native Christians.	Hindus.	Mahomedans.	Parsis.	Jains.	Gonds and other aboriginal tribes.	Others.			
27	28	29	30	31	31	31b	31	32	33	34
3	...	192	13	3	...	...	1	1	...	*One girl reading French.
3	...	192	13	3	...	...	1	1	...	
17	6	534	55	4	...	2	...	...	...	
137	44	3,860	506	5	3	6	9	15	...	
...	162	16,196	1,815	2	100	184	227	255	...	
...	...	...	...	...	...	...	...	...	...	
102	3	...	...	...	...	...	...	...	...	*Deduct 131 boys in girls' schools and add 1,914 girls in boys' schools and we obtain 7,563 girls,—see Table No. V.
...	4	124	5	...	...	...	...	...	...	
256	219	20,714	2,381	11	103	192	236	270	...	
347	331	70,059	6,041	15	248	1,494	2,342	1,644	...	
363	264	4,520	310	2	42	7	34	...	131	
710	595	74,579	6,351	17	290	1,501	2,376	1,644	131	
...	...	187	17	...	...	2	...	...	...	
...	1	18	...	...	...	...	...	...	...	
...	...	...	...	...	...	...	...	...	...	
1	...	81	3	3	...	...	1	...	...	
...	1	27	1	...	...	...	...	...	...	
1	...	11	1	...	...	...	...	...	...	
...	...	319	27	1	1	...	...	...	...	
...	...	51	...	...	...	...	...	...	...	
2	2	694	49	4	1	2	1	...	...	
971	816	96,179	8,794	35	394	1,695	2,614	1,915	131	
...	...	...	...	...	...	...	...	...	...	
...	...	...	...	...	...	...	...	...	...	
...	...	...	...	...	...	...	...	...	...	
...	...	...	...	...	...	...	...	...	...	
...	...	...	...	...	...	...	...	...	...	
...	...	...	...	...	...	...	...	...	...	
...	...	...	...	...	...	...	...	...	...	
...	...	...	...	...	...	...	...	...	...	
...	...	...	...	...	...	...	...	...	...	
971	816	96,179	8,794	35	394	1,695	2,614	1,915	131	

as the basis of classification for Colleges or Departments of Colleges for professional training and such special schools does not form part of their curriculum.
European and oriental classical languages.
schools, according as the number of boys or of girls is greater.
girls in boys' schools and the number of boys in girls' schools, should be shewn in columns 32 and 33, respectively.
by the Education Department, should be entered in columns 10 to 13 and not in columns 2 to 5.

Return of Expenditure on Public Instruction

Objects of Expenditure	Public						
	Under Public						
	Managed by Government.						
	Provincial Revenues	Local Rates or Cesses.	Municipal Funds.	Fees.	Subscriptions.	Endowments and other sources.	Total.
1	2a	2b	2c	2d	2e	2f	2
	Rs.	Rs.	Rs.	Rs.	Rs	Rs.	Rs.
Arts Colleges.							
University Education. — English	14,290	...	...	2,349	...	3,404	20,043
Total ...	14,290	...	...	2,349	...	3,404	20,043
Secondary Schools.							
School Education, General. — High Schools. ...	7,483	...	3,202	5,513	..	728	16,926
For Boys — Middle Schools — English ...	31,331	50	17,791	10,616	1,046	363	61,197
For Boys — Middle Schools — Vernacular ...	7,905	...	6,775	1,944	253	118	16,995
For Boys — High Schools ..	...	...	...	...	...	...	...
For Girls — Middle Schools — English ..	.	...	...	...	...	...	...
For Girls — Middle Schools — Vernacular ...	312	...	313	...	...	...	625
Total ...	47,031	50	28,081	18,073	1,299	1,209	95,743
Primary Schools.							
For Boys	22,732	...	14,081	10,222	743	454	48,232
For Girls	4,471	...	2,409	..	318	28	7,226
Total ...	27,203	...	16,490	10,222	1,061	482	55,458
Schools for Special Instruction.							
School Education, special. — Training Schools for Masters ...	25,599	.	...	...	...	...	25,599
Do. Schools for Mistresses ..	6,104	..	...	...	...	...	6,104
Law Schools	1,851	...	...	1,479	...	30	3,360
Agricultural Schools ..	2,159	...	...	...	...	...	2,159
Practical Engineering School ...	2,896	...		...	...	...	2,896
Industrial Schools	2,052	...	24	...	...	...	2,076
Total ...	40,661	...	24	1,479	...	30	42,194
Buildings	11,208	...	1,925	...	237	...	13,370
Furniture and Apparatus (special grants only)	3,424	...	551	...	387	9	4,371
Total ...	14,632	...	2,476	...	624	9	17,741
University	...	...	...	...	...	...	...
Direction	...	...	...	...	...	...	...
Inspection	..	...	...	...	...	...	...
Scholarships held in — Arts Colleges ...	..	...	...	...	...	...	...
Scholarships held in — Professional Colleges ..	...	...	...	...	...	...	...
Scholarships held in — Secondary Schools ..	...	...	...		...	...	...
Scholarships held in — Primary Schools ...	...	...	...	...	...	...	...
Scholarships held in — Special Schools other than Training Schools..	...	...	...	...	...	...	...
Miscellaneous	..	...	...	...	...	...	...
Total ..	..	...	...	...	...	...	...
TOTAL EXPENDITURE ON PUBLIC INSTRUCTION.	1,43,817	50	47,071	32,123	2,984	5,134	2,31,179

I.—Fractions of a rupee are to be omitted.

II.—If the income of any school maintained by the Department (or by a Local or Municipal Board) exceeds the expenditure, the equalised. If in such school the income from fees or other private sources alone exceeds the expenditure, the excess income

III.—If the income of any aided school exceeds the expenditure, the excess should be proportionately deducted from the sub-heads actual receipts from Provincial Revenues and from Local and Municipal Funds should be shown in full.

IV.—In calculating the expenditure from Provincial Revenues or any other Fund, all payments or contributions from Fees or other

V.—The expenditure under 'University,' 'Direction,' and 'Inspection' should be shown only in columns 7, and its sub-divisions, and

VI.—The expenditure on stipends held in Training Schools should be shown as part of the expenditure in those schools, not under the

VII.—The expenditure entered in columns 4a, 4b and 4c, should be included in column 7e and not in columns 7a, 7b, and 7c. The

VIII.—Schools maintained by Native States, even though managed by the Education Department, should be entered in columns 4a to 4 and

TABLE IV.

in the Central Provinces for the official year 1890-91.

Institutions.													
management.													
Managed by Local Fund and Municipal Boards.							Maintained by Native States.						
Provincial Revenues.	Local Rates or Cesses.	Municipal Funds.	Fees.	Subscriptions.	Endowments and other sources.	Total.	Native State revenues.	Local Rates or Cesses levied in Native States.	Municipal Funds raised in Native States.	Fees.	Subscriptions.	Endowments and other sources.	Total.
3a	3b	3c	3d	3e	3f	3	4a	4b	4c	4d	4e	4f	4
Rs.	Rs.	Rs.	Rs.	Rs.	Rs.	Rs.	Rs.	Rs.	Rs.	Rs.	Rs.	Rs.	Rs.
...	...	...	...	...	...	...	...	...	..	..	...	...	...
...	...	...	...	...	...	...	...	...	...	..	...	...	...
...	...	...	...	...	...	...	...	...	...	..	...	...	...
690	1,406	1,480	467	1,130	...	5,173	876	...	...	48	275	48	1,247
5,629	40,748	275	4,690	612	285	52,239	1,404	1,593	...	45	...	72	3,114
...	...	...	...	...	...	...	...	...	...	...	...	...	...
...	...	...	...	...	...	...	...	...	...	...	...	...	...
...	...	...	...	...	...	...	...	...	...	..	...	...	...
6,319	42,154	1,755	5,157	1,742	285	57,412	2,280	1,593	...	93	275	120	4,361
24,261	92,020	4,125	13,554	2,643	483	1,37,086	6,511	4,654	..	334	1,517	1,146	14,162
1,168	5,082	1,338	..	118	...	7,706	257	120	..	..	75	...	452
25,429	97,102	5,463	13,554	2,761	483	1,44,792	6,768	4,774	..	334	1,592	1,146	14,614
...	...	...	...	...	...	...	...	...	...	...	...	...	...
...	...	...	...	...	...	...	...	...	...	...	...	...	...
...	...	...	...	...	...	...	..	...	..	...	...	...	...
...	...	...	...	...	...	...	...	...	...	..	...	...	...
...	...	...	...	...	...	...	...	...	...	..	...	...	...
...	480	10	...	...	...	580	...	...	...	..	...	...	...
...	480	100	...	...	...	580	...	...	...	..	...	...	...
1,618	4,749	827	...	5,836	...	13,030	2,445	...	..	..	...	...	2,445
325	1,484	124	449	530	...	2,912	595	...	...	..	...	...	595
1,943	6,233	951	449	6,366	...	15,942	3,040	...	...	..	...	...	3,040
...	...	...	...	...	...	...	...	...	...	..	...	...	...
...	...	...	...	...	...	...	...	...	...	..	...	...	...
...	...	...	...	...	...	...	...	...	...	..	...	...	...
..	...	...	...	...	...	...	...	...	...	...	...	...	...
...	...	...	...	...	...	...	...	...	..	..	...	...	...
...	...	...	...	...	...	...	...	...	..	..	...	...	...
...	...	...	...	...	...	...	...	...	...	..	...	...	...
...	...	...	...	...	...	...	...	...	...	..	...	...	...
...	...	...	...	...	...	...	...	...	...	...	...	...	...
...	...	...	...	...	...	...	...	...	...	..	...	...	...
33,691	1,45,969	8,269	19,160	10,869	768	2,18,726	12,088	6,367	...	427	1,867	1,266	22,015

return of Government (or Local or Municipal) expenditure should be reduced accordingly, the income and expenditure of the school being thus
and the sources from which it is derived should be shown in the column of Remarks
of Endowments, Subscriptions, and other sources; or, if the receipts from those sources are sufficient, from the sub-head of Fees also. The

sources credited to that Fund should be deducted. Such payments should be shown as expenditure under the sub heads to which they belong.
not in the preceding columns.
head of Scholarships
expenditure entered in column 4d should be included in column 7d.
not in columns 2a to 2,

Objects of Expenditure.	Public						
	Under Private						
	Aided by Government or by Local Fund or Municipal Boards.						
	Provincial Revenues.	Local Rates or Cesses.	Municipal Funds.	Fees.	Subscriptions.	Endowments and other sources.	Total.
1	5a	5b	5c	5d	5e	5f	5
	Rs.	Rs.	Rs.	Rs.	Rs.	Rs.	Rs.
Arts Colleges.							
University Education. — English	3,472	...	2,850	1,373	...	17,216	24,911
Total ..	3,472	...	2,850	1,373	...	17,216	24,911
Secondary Schools.							
School Education, General — High Schools ...	5,260	...	1,792	2,278	351	6,126	15,807
For Boys — Middle Schools .. — English ...	10,656	...	3,711	5,792	1,749	9,172	31,080
For Boys — Middle Schools .. — Vernacular ...	2,109	528	60	939	284	1,645	5,565
For Girls — High Schools ...	...	...	...	...	...	...	...
For Girls — Middle Schools .. — English ...	3,173	...	300	1,860	215	2,160	7,708
For Girls — Middle Schools .. — Vernacular ...	82	...	...	9	...	...	91
Total ...	21,280	528	5,863	10,878	2,599	19,103	60,251
Primary Schools.							
For Boys	22,987	4,319	3,640	9,018	5,563	17,972	64,099
For Girls	10,431	...	1,555	4,228	1,951	14,080	32,245
Total ..	33,418	4,319	5,195	13,846	7,514	32,052	96,344
Schools for Special Instruction.							
School Education, Special — Training Schools for Masters ..	...	...	...	...	...	...	...
Do. Schools for Mistresses ..	...	...	...	...	...	...	...
Law Schools ..	...	...	...	...	...	...	...
Agricultural School ..	...	...	...	...	...	...	...
Practical Engineering School ..	..	...	...	...	...	...	..
Industrial Schools ..	..	...	...	...	...	...	...
Total ..	...	...	...	...	...	..	...
Buildings	10,572	...	61	546	538	36,416	48,133
Furniture and Apparatus (special grants only) ..	...	27	2	9	467	311	816
Total ..	10,572	27	63	555	1,005	36,727	48,949
University	...	...	...	...	...	...	...
Direction	...	...	...	...	...	...	...
Inspection	...	...	...	...	...	...	...
Scholarships held in ... — Arts Colleges	...	...	...	...	...	...	...
Scholarships held in ... — Professional Colleges ..	...	...	...	...	...	...	...
Scholarships held in ... — Secondary Schools ..	...	...	...	...	...	...	...
Scholarships held in ... — Primary Schools ..	...	...	..	...	...	...	...
Scholarships held in ... — Special Schools other than Training Schools ..	...	...	...	...	...	...	...
Miscellaneous	...	...	...	...	...	...	...
Total ..	...	...	..	..	...	...	...
TOTAL EXPENDITURE ON PUBLIC INSTRUCTION	68,742	4,874	13,971	26,652	11,118	1,05,098	2,30,455

TABLE IV.—(Concluded).

Institutions. management. Unaided.				Total Expenditure from						
Fees.	Subscriptions.	Endowments and other sources.	Total.	Provincial Revenues.	Local Rates or Cesses.	Municipal Funds.	Fees.	All other sources.	Grand Total.	Remarks.
6a	6b	6c	6	7a	7b	7c	7d	7e	7f	8
Rs.	Rs.	Rs.	Rs.	Rs.	Rs.	Rs.	Rs.	Rs.	Rs.	
...	...	...	...	17,762	...	2,850	3,722	20,620	44,954	
...	...	...	...	17,762	...	2,850	3,722	20,620	44,954	
45	...	...	45	12,743	...	4,994	7,836	7,205	32,778	
186	40	1,129	1,355	42,677	1,456	22,982	17,109	15,828	1,00,052	
40	...	808	848	15,648	41,276	7,110	7,658	7,074	78,761	
...	...	...	...	...	...	...	...	...	...	
...	...	...	...	3,173	...	300	1,860	2,375	7,708	
...	...	...	...	391	...	313	9	...	716	
271	40	1,937	2,248	74,630	42,732	35,699	34,472	32,482	2,20,015	
711	174	6,310	7,195	69,980	96,339	21,846	34,439	48,170	2,70,774	
...	53	98	151	16,070	5,082	5,302	4,228	17,098	47,780	
711	227	6,408	7,346	86,050	1,01,421	27,148	38,667	65,268	3,18,554	
...	...	...	...	25,599	...	...	...	...	25,599	
...	...	...	...	6,104	...	...	...	...	6,104	
...	...	...	...	1,851	...	...	1,479	30	3,360	
...	...	...	...	2,159	...	...	...	...	2,159	
...	...	...	...	2,896	...	...	...	...	2,896	
...	...	...	...	2,052	480	124	...	...	2,656	
...	...	...	...	40,661	480	124	1,479	30	42,774	
...	...	2,574	2,574	23,398	4,749	2,813	546	48,046	79,552	
...	...	126	126	3,749	1,511	677	458	2,425	8,820	
...	...	2,700	2,700	27,147	6,260	3,490	1,004	50,471	88,372	
...	...	...	...	...	...	...	...	...	...	
...	...	...	...	26,268	...	...	...	...	26,268	
...	...	...	...	80,001	...	...	...	1,857	81,858	
...	...	...	...	3,370	...	...	...	...	3,370	
...	...	...	...	944	...	...	...	...	944	
...	...	...	...	7,974	8,828	245	...	1,523	18,570	
...	...	...	...	1,190	1,962	211	...	156	3,556	
...	...	...	...	...	24	180	...	...	204	
...	...	...	...	187	...	...	...	30,800	30,987	
...	...	...	...	1,19,934	10,821	666	...	34,336	1,65,757	
982	267	11,045	12,294	3,66,184	1,61,714	69,977	79,344	2,03,207	8,80,426	

Return of the Stages of Instruction of Pupils in public Schools for General Education

Class of Schools.			Number of Schools.	Number of pupils on the rolls on 31st March.	High Stage. Comprising all pupils who have passed beyond the Lower Secondary (Middle) Stage, but have not passed the Matriculation Examination. 1		
					Boys.	Girls.	Total.
SECONDARY SCHOOLS—							
For Boys	Government	English	39	3,255	271	...	271
		Vernacular	26	3,228	...	...	...
	Local Fund	English	2	118	...	...	...
		Vernacular	114	12,929	...	...	...
	Municipal	English	2	98	...	...	...
		Vernacular	1	93	...	...	...
	Native States	English	3	66	...	...	...
		Vernacular	4	273	...	...	...
	Aided	English	24	1,481	338	...	338
		Vernacular	30	1,898	...	...	...
	Unaided	English	5	170	9	...	9
		Vernacular	3	265	...	...	...
		Total	253	23,874	618	..	618
For Girls	Government	English	...	...	...	...	...
		Vernacular	1	105	...	...	...
	Local Fund	English	...	...	...	...	...
		Vernacular	...	...	...	...	...
	Municipal	English	...	...	...	...	...
		Vernacular	...	...	...	...	...
	Native States	English	...	...	...	...	...
		Vernacular	...	...	...	...	...
	Aided	English	5	105	...	...	...
		Vernacular	1	28	...	...	...
	Unaided	English	...	...	...	...	...
		Vernacular	...	...	...	...	...
		Total	7	238	...	...	...
	TOTAL SECONDARY SCHOOLS.		260	24,112	618	...	618
PRIMARY SCHOOLS—							
For Boys	Government		185	8,031	...	...	...
	Local Fund		624	40,526	...	...	...
	Municipal		20	1,463	...	..	...
	Native States		98	5,967	...	...	...
	Aided		452	20,882	...	...	...
	Unaided		101	4,008	...	...	...
		Total	1,430	80,877	...	...	...
For Girls	Government		28	1,176	...	...	...
	Local Fund		31	1,406	...	...	...
	Municipal		5	240	...	...	...
	Native States		4	183	...	...	...
	Aided		47	2,194	...	...	...
	Unaided		12	343	...	...	...
		Total	127	5,542	...	...	...
	TOTAL PRIMARY SCHOOLS		1,557	86,419	...	...	...
	GRAND TOTAL		1,817	1,10,531	618	...	618

NOTE —The number of Girls shown in this table should correspond with the number
Mixed schools should be entered as boy's schools or girls' school,
To obtain the number of schools and Colleges, 1,845 and of Scholars 1,11,498 of Table No. III, add 28 Colleges

TABLE V.

in the Central Provinces, at the end of the official year 1890-91.

Middle Stage.			Upper Primary Stage.			Lowert Primary Stage.						Total.		
Comprising all pupils who have passed beyond the Upper Primary Stage, but have not passed beyond the Lower Secondary (Middle) Stage.			Comprising all pupils who have passed beyond the Lower Primary Stage, but have not passed beyond Upper Primary Stage.			Comprising all pupils who have not passed beyond the Lower Primary Stage.								
						Reading printed books,			Not reading printed books.					
2			3			4			5					
Boys.	Girls.	Total.	Boys.	Girls.	Total	Boys.	Girls.	Total.	Boys.	Girls.	Total.	Boys.	Girls.	Total.
2,984	...	2,984	...	...	...	...	...	...	...	...	...	3,255	...	3,255
471	...	471	435	...	435	1,210	...	1,210	1,112	...	1,112	3,228	...	3,228
118	...	118	...	...	...	...	...	...	...	...	...	118	...	118
1,684	...	1,684	1,781	2	1,783	4,569	23	4,592	4,686	184	4,870	12,720	209	12,929
98	...	98	...	...	...	...	...	...	...	...	...	98	...	98
6	...	6	23	...	23	39	...	39	25	...	25	93	...	93
66	...	66	...	...	...	...	...	...	...	...	...	66	...	66
74	...	74	39	...	39	48	...	48	112	...	112	273	...	273
1,128	15	1,143	...	...	...	...	...	...	...	...	...	1,466	15	1,481
261	...	261	272	3	275	597	6	603	722	37	759	1,852	46	1,898
161	...	161	..	...	...	...	...	...	...	...	...	170	...	170
48	...	48	33	...	33	111	...	111	73	...	73	265	...	265
7,099	15	7,114	2,583	5	2,588	6,574	29	6,603	6,730	221	6,951	23,604	270	23,874
...	...	...	...	...	...	...	...	...	...	...	...	...	...	...
...	16	16	...	16	16	...	47	47	...	26	26	...	105	105
...	...	...	...	...	...	...	...	...	...	...	...	...	...	...
...	...	...	...	...	...	...	...	...	...	...	...	...	...	...
...	...	...	...	...	...	...	...	...	...	...	...	...	...	...
...	...	...	...	...	...	...	...	...	...	...	...	...	...	...
...	...	...	...	...	...	...	...	...	...	...	...	...	...	...
...	...	...	...	...	...	...	...	...	...	...	...	...	...	...
...	105	105	...	..	...	...	...	...	...	...	...	...	105	105
..	3	3	...	2	2	...	8	8	...	15	15	...	28	28
...	...	...	...	...	...	...	...	...	...	...	...	...	...	...
...	...	...	...	...	...	...	...	...	...	...	...	...	...	...
...	124	124	...	18	18	...	55	55	...	41	41	...	238	238
7,099	139	7,238	2,583	23	2,606	6,574	84	6,658	6,730	262	6,992	23,604	508	24,112
...	...	...	2,150	...	2,150	3,552	10	3,562	2,257	62	2,319	7,959	72	8,031
...	...	...	6,754	55	6,809	15,746	197	15,943	16,980	794	17,774	39,480	1,046	40,526
...	...	...	160	...	160	742	...	742	561	...	561	1,463	...	1,463
...	...	...	586	10	596	1,832	20	1,852	3,479	40	3,519	5,897	70	5,967
...	...	...	2,878	41	2,919	8,816	83	8,899	8,788	276	9,064	20,482	400	20,882
...	...	...	232	4	236	1,267	16	1,283	2,453	36	2,489	3,952	56	4,008
...	...	...	12,760	110	12,870	31,955	326	32,281	34,518	1,208	35,726	79,233	1,644	80,877
...	...	...	2	66	68	8	384	392	8	708	716	18	1,158	1,176
...	...	...	...	123	123	...	550	550	...	733	733	..	1,406	1,406
...	...	...	...	18	18	...	75	75	...	147	147	...	240	240
...	...	...	...	...	...	...	30	30	4	149	153	4	179	183
...	...	..	25	200	225	34	835	869	50	1,050	1,100	109	2,085	2,194
...	...	...	...	..	...	...	57	57	...	286	286	...	343	343
...	...	...	27	407	434	42	1,931	1,973	62	3,073	3,135	131	5,411	5,542
...	...	...	12,787	517	13,304	31,997	2,257	34,254	34,580	4,281	38,861	79,364	7,055	86,419
7,099	139	7,238	15,370	540	15,910	38,571	2,341	40,912	41,310	4,543	45,853	1,02,968	7,563	1,10,531

returned under Primary and Secondary Schools in General Forms I and III.
according as the number of boys or of girls is greater.
and special schools and 967 pupils.

Return showing the Results of Prescribed Examinations in the

Nature of Examination.	Number of Institutions sending Examinees.				Number of Examinees				
	Institutions under Public management.	Aided Institutions.	Other Institutions.	Total.	Institutions under Public management.	Aided Institutions.	Other Institutions.	Private Students.	Total.
1	2	3	4	5	6	7	8	9	10
Arts Colleges—									
1. Master of Arts	...	...	...	...	...	...	...	...	...
2. Bachelor of Arts	1	2	...	3	8	27	...	...	35
3. B. Sc	...	...	...	...	...	...	...	...	...
4. First B. A.	...	...	...	...	...	...	...	...	...
First B. Sc.	...	...	...	...	...	...	...	...	...
First Arts	1	3	...	4	30	27	...	2	59
Previous Examination	...	...	...	...	...	...	...	...	...
Colleges for Professional Training—									
Law—									
1. Doctor of Law	...	...	...	...	...	...	...	...	...
2. Bachelor of Law	1	...	...	1	6	...	...	...	6
Medicine—									
1. First M. B	...	...	...	...	...	...	...	...	...
First L. M. S.	...	...	...	...	...	...	...	...	...
Engineering—									
1. L. C. E.	...	...	...	...	...	...	...	...	...
2. First L. C. E.	...	...	...	...	...	...	...	...	..
Schools of General Education—									
Matriculation ... Boys ...	4	6	1	11	138	144	4	30	316
Girls ...	...	...	...	...	...	...	...	...	...
Middle School Examination ... Boys ...	36	18	6	60	491	262	63	81	897
Girls ..	...	...	...	...	..	...	...	...	...
Upper Primary Examination ... Boys ...	898	280	23	1,201	8,852	1,809	315	...	10,976
Girls ..	33	22	...	55	160	118	...	...	278
Lower Primary Examination ... Boys ...	907	325	36	1,268	10,970	2,840	605	...	14,415
Girls ...	53	26	8	87	371	147	...	...	518
Public Service Certificate Examination .. English ...	...	...	...	...	...	...	...	1	1
Vernacular ...	...	...	...	...	...	...	...	13	13
Schools of Special Instruction—									
1. Agricultural Examination ..	1	...	...	1	29	...	...	...	29
2. Training School. Examination for Masters. Secondary class. Vernacular...	16	...	...	16	210	...	...	...	210
English ...	1	...	...	1	28	...	...	...	28
3. Training School. Examination for Mistresses.	1	...	...	1	5	...	...	...	5
4. Examination in Engineering. Final ..	1	...	...	1	9	...	...	...	9
Annual ..	1	.	...	1	9	..	...	...	9
5. Examination in Surveying ...	6	...	...	6	50	...	...	...	50
6. [illegible]y School of Art Examination ...	22	2	...	24	348	14	...	16	378

NOTE.—Any other special examination, such as the "Intermediate"

TABLE VI.

Central Provinces during the official year 1890-91.

Number passed.					Race or Creed of passed Scholars.						Remarks.
Institutions under Public management.	Aided Institutions	Other Institutions.	Private Students.	Total.	Europeans and Eurasians.	Native Christians.	Hindus.	Muhammadans.	Gonds and other aborigines.	Others.	
11	12	13	14	15	16a	16b	16c	16d	16e	16f	17
...	...	...	...	..	...	...	...	...	...	...	
3	12	...	...	15	...	...	14	...	1	...	
...	...	...	...	...	...	...	...	...	...	...	
...	...	...	...	...	...	...	...	...	...	...	
...	...	...	...	...	...	...	...	...	...	...	
21	18	...	...	39	4	...	30	5	...	...	
..	...	...	...	...	...	...	...	...	...	...	
...	..	...	...	...	...	...	...	...	...	...	
4	...	...	...	4	...	...	4	...	...	...	
...	...	...	...	...	...	...	...	...	...	...	
...	...	...	...	...	...	...	...	...	...	...	
...	...	...	...	...	...	...	...	...	...	...	
...	...	...	..	...	...	...	...	...	...	...	
39	58	1	5	103	7	1	81	12	2	...	
...	...	...	...	...	...	...	...	...	...	...	
339	166	29	10	544	19	4	472	49	...	...	
...	..	...	...	...	...	...	...	...	...	...	
5,615	1,222	189	...	7,026	85	27	6,221	466	158	119	
117	59	...	...	176	17	4	129	20	2	4	
7,507	1,716	385	...	9,608	43	32	8,327	634	350	222	
221	85	...	...	309	34	6	243	14	7	5	
...	...	..	1	1	...	...	1	...	1	...	
...	...	...	10	10	...	...	8	2	...	...	
21	...	...	...	21	...	1	19	1	...	...	
143	...	...	...	143	...	...	132	8	3	...	
25	...	...	...	25	...	...	24	1	..	...	
4	...	...	...	4	...	...	4	...	...	...	
2	...	...	...	2	...	...	2	...	...	...	
8	...	...	...	8	...	...	7	1	...	...	
39	...	...	...	39	...	...	34	4	1	...	
32	...	...	...	32	1	...	30	1	...	...	

or other examinations of the Panjab University, may be added to this list.

Return showing the Distribution of Local Fund and Municipal Expenditure on Public

Objects of Expenditure.	Expenditure of Local Funds Boards on Public Instruction. In Institutions managed by Local Fund Boards.										
	Number of Institutions	Number of Scholars on the rolls on 31st March.	Average number on the rolls monthly during the year.	Average daily attendance.	Provincial grants.	Local Rates or Cesses.	Municipal grants.	Fees.	Subscriptions.	Endowments and other sources.	Total.
1	2	3	4	5	6	7	8	9	10	11	12
Arts Colleges.					Rs.	Rs.	Rs.	Rs.	Rs.	Rs.	Rs.
University Education. English ...	...	...	...	...	...	...	...	...	...	...	...
Total ...	...	...	...	...	...	...	...	...	...	...	...
Secondary Schools.											
School Education, General. For Boys... High Schools ...	...	...	...	...	...	...	...	...	...	...	...
For Boys... Middle Schools. English ...	2	118	100	79	...	1,406	...	198	755	...	2,359
For Boys... Middle Schools. Vernacular ...	114	12,929	12,332	8,844	5,629	40,748	...	4,630	612	285	51,904
For Girls ... Middle School. English	...	...	...	...	...	...	...	...	...	...	...
For Girls ... Middle School. Vernacular ...	...	...	...	...	...	...	...	...	...	...	...
Total ...	116	13,047	12,432	8,923	5,629	42,154	...	4,828	1,367	285	54,263
Primary Schools.											
For Boys ...	624	40,526	39,225	26,208	23,927	92,020	...	12,430	2,378	483	1,31,238
For Girls ...	31	1,406	1,368	922	1,103	5,082	...	...	56	...	6,241
Total ...	655	41,932	40,593	27,130	25,030	97,102	...	12,430	2,434	483	1,37,479
Schools for Special Instruction.											
School Education, Special. Training Schools for Masters ...	...	...	...	...	...	...	...	...	...	...	...
Training Schools for Mistresses ...	...	...	...	...	...	...	...	...	...	...	...
Schools of Art ...	...	...	...	...	...	...	...	...	...	...	...
Engineering and Surveying Schools ...	...	...	...	...	...	...	...	...	...	...	...
Industrial Schools ...	4	141	140	105	...	480	...	...	...	...	480
Other Schools ...	...	...	...	...	...	...	...	...	...	...	...
Total ...	4	141	140	105	...	480	...	...	...	...	480
Buildings ...	...	...	...	...	1,618	4,749	827	...	5,836	...	13,030
Furniture and Apparatus (special grants only)...	...	...	...	...	325	1,484	124	449	530	...	2,912
Total ...	...	...	...	...	1,943	6,233	951	449	6,366	...	15,942
Inspection ...	...	...	...	...	...	...	...	...	...	...	...
Scholarships held in. Arts Colleges ...	...	...	...	...	...	...	...	...	...	...	...
Professional Colleges ...	...	...	...	...	...	...	...	...	...	...	...
Secondary Schools ...	...	...	...	...	...	...	...	...	...	...	...
Primary Schools ...	...	...	...	...	...	...	...	...	...	...	...
Special Schools other than training schools ...	...	...	...	...	...	...	...	...	...	...	...
Total ...	...	...	...	...	...	...	...	...	...	...	...
GRAND TOTAL ...	775	55,120	53,165	36,158	32,602	1,65,969	951	17,707	10,167	768	2,08,164

I.—The sum of the expenditure in columns 12 and 27 should agree with the expenditure shown in column 3 of
II.—The sum of the expenditure in columns 16 and 31 should agree with the expenditure shown in columns 7b
III.—The expenditure under Inspection, Scholarships and Miscellaneous should be shewn only in columns 16, 31

TABLE VII.

Instruction in the Central Provinces for the official year 1890-91.

				Expenditure of Municipal Boards on Public Instruction.															
In Institutions maintained by			Total Local Fund Expenditure on Public Instruction.	In Institutions managed by Municipal Boards.											In Institutions managed by			Total Municipal Expenditure on public Instruction.	Total Expenditure of Local Fund and Municipal Boards on Public Instruction.
The Government.	Municipal Boards.	Private persons or Associations.		Number of Institutions.	Number of Scholars on the rolls on 31st March.	Number of Scholars on the rolls monthly during the year.	Average daily attendance.	Provincial grants.	Municipal Rates.	Local Fund grants.	Fees.	Subscriptions.	Endowments and other sources.	Total.	The Government.	Local Funds Boards.	Private persons or Associations.		
13	14	15	16	17	18	19	20	21	22	23	24	25	26	27	28	29	30	31	32
Rs.	Rs.	Rs.	Rs.		Rs.	Rs.	Rs.	Rs.	Rs.		Rs.	Rs.	Rs.	Rs.	Rs.	Rs.	Rs.	Rs.	Rs.
...	...	...	...	...	...	...	...	...	...	...	..	...	...	...	...	...	2,850	2,850	2,850
...	...	...	...	...	...	...	...	...	...	...	...	...	...	...	...	...	2,850	2,850	2,850
...	...	...	...	...	...	...	...	...	...	...	...	...	...	...	3,202	...	1,792	4,994	4,994
50	...	...	1,456	2	98	86	70	690	1,480	...	269	375	...	2,814	17,791	...	3,711	22,982	24,438
...	...	528	41,276	1	93	91	60	...	275	.	60	...	...	335	6,775	...	60	7,110	48,386
...	...	...	...	...	...	...	...	...	...	...	...	...	...	...	...	...	300	300	300
...	...	...	...	...	...	...	...	...	...	...	...	...	...	...	313	...	...	313	313
50	...	528	42,732	3	191	177	130	690	1,755	..	329	375	...	3,149	28,081	...	5,863	35,699	78,431
...	...	4,319	96,339	20	1,463	1,449	1,170	334	4,125	...	1,124	265	...	5,848	14,081	...	3,640	21,846	1,18,185
...	...	..	5,082	5	240	228	165	65	1,338	...	...	62	...	1,465	2,409	...	1,555	5,302	10,384
...	...	4,319	1,01,421	25	1,703	1,677	1,335	399	5,463	...	1,124	327	...	7,313	16,490	...	5,195	27,148	1,28,569
...	...	...	...	...	...	...	...	...	...	...	...	...	...	...	...	...	...	...	...
...	...	...	...	...	...	...	...	...	...	...	...	...	...	...	...	...	...	...	...
...	...	...	...	.	...	...	...	...	...	...	...	...	...	...	...	...	...	...	...
...	...	...	...	...	...	...	...	...	...	...	...	...	...	...	...	...	...	...	...
...	...	...	480	1	23	22	17	...	100	...	...	...	...	100	24	...	...	124	604
...	...	...	...	...	...	...	...	...	...	...	...	...	...	...	...	...	...	...	...
...	...	...	480	1	23	22	17	...	100	...	...	...	...	100	24	...	...	124	604
...	...	...	4,749	...	...	...	...	...	...	...	...	...	...	...	1,925	827	61	2,813	7,562
..	..	27	1,511	...	...	...	...	...	...	...	...	...	...	...	551	124	2	677	2,188
...	...	27	6,260	..	...	...	...	...	...	..	...	...	...	...	2,476	951	63	3,490	9,750
...	...	...	...	...	...	...	...	...	...	...	...	...	...	...	...	...	...	...	...
...	...	...	...	...	...	...	...	...	...	..	...	...	...	...	...	...	...	...	...
...	...	...	...	...	...	...	...	...	...	..	...	...	..	...	...	...	...	...	...
...	...	...	8,828	...	...	...	...	...	...	...	...	...	...	...	...	...	...	245	9,078
...	...	...	1,969	...	...	...	...	...	...	..	...	...	...	...	...	...	...	241	2,210
...	...	...	24	...	...	...	...	...	...	...	...	...	...	...	...	...	...	180	204
...	...	...	10,821	...	...	...	...	...	...	..	...	...	...	...	..	...	...	666	11,487
50	...	4,874	1,61,714	29	1,917	1,876	1,482	1,089	7,318	..	1,453	702	...	10,562	47,041	951	13,971	69,977	2,31,691

General Table IV.

and 7c respectively, of General Table IV, and the Local Fund and Municipal expenditure of Native States should be excluded.

and 32 and not in the other columns.

EDUCATION—SUBSIDIARY TABLE No. II.—FOR EUROPEANS ONLY.

Abstract Return of Expenditure on European Institutions in the Central Provinces for the official year 1890-91.

	Total Direct Expenditure.				Total Indirect Expenditure.			Total Expenditure.	Remarks.
	University Education.	School Education, General.		Total.	Scholarships.	Buildings.	Total.		
	Arts Colleges.	Secondary Schools.	Primary Schools.						
1	2	3	4	5	6	7	8	9	10
		Rs.	Rs.	Rs.	Rs.	Rs.	Rs.	Rs.	
Institutions ... For Males	...	11,887	14,963	26,850	820	1,197	2,017	28,867	
Institutions ... For Females	...	7,186	15,364	22,550	144	4,500	4,644	27,194	
Total ...	...	19,073	30,327	49,400	964	5,697	6,661	56,061	
(a). Percentages of Provincial expenditure included in columns 2 to 8 to Total Provincial expenditure on European Institutions	...	34·33	45·03	79·36	3·85	16·79	20·64	100	
(b). Do. do. to Municipal Expenditure ...	...	39·01	60·99	100	...	...	...	100	
(c). Do. do. to Total Expenditure ...	...	34·02	54·10	88·12	1·72	10·16	11·88	100	
	Rs. a. p.	Rs. a. p	Rs. a. p.	Rs. a. p.					
Average annual cost of educating each pupil—	...	73 10 3	43 0 3	51 3 11					
Aided Institutions. Cost of Provincial Revenues ...	...	33 2 1	16 2 5	20 12 0					
Aided Institutions. Cost of Municipal Funds ...	...	4 3 11	2 7 9	2 15 2					
Total ...	...	73 10 3	43 0 3	51 3 11					

EDUCATION—SUBSIDIARY TABLE No. III.—FOR EUROPEANS ONLY.

Return of European Schools and Scholars in the Central Provinces for the official year 1890-91.

	Public Institutions.								Grand total of Public Institutions.	Grand Total of Scholars on 31st March.	Number of Scholars on 31st March learning.			Girls in Boys' schools.	Boys in Girls' schools.	Remarks.
	Under Private management															
	Aided by the Department, Local Fund or Municipal Board.				Unaided.											
	Number of Institutions.	Number of Scholars on the 31st March.	Average number on rolls monthly during the year.	Average daily attendance.	Number of Institutions.	Number of Scholars on the 31st March.	Average number on rolls monthly during the year.	Average daily attendance.			English.	A Classical language.	A Vernacular language.			
1	2	3	4	5	6	7	8	9	10	11	12	13	14	15	16	17
COLLEGES.																
Secondary Schools.																
ENGLISH.																
School Education, General. — High Schools ...	1	16	17	15	...	...	...	...	1	16	16	16	...	...	...	* Deduct 91 boys in Girls' schools and add 98 girls in Boys' schools and we obtain 471 girls, see Subsidiary Table No. V for Europeans only.
For Boys ... Middle Schools ..	4	137	141	116	...	...	...	...	4	137	137	95	42	15	...	
For Girls ... Do. do. ...	4	102	101	95	...	...	...	...	4	*102	102	...	80	...	...	
Total ..	9	255	259	226	...	...	...	...	9	255	255	111	122	15	...	
Primary Schools.																
For Boys	6	328	341	276	1	17	8	7	7	345	345	...	...	83	...	
For Girls	5	362	353	287	...	...	..	...	5	*362	362	...	...	...	91	
Total ...	11	690	694	563	1	17	8	7	12	707	707	...	...	83	91	
TOTAL OF SCHOOLS OF PUBLIC INSTRUCTION ...	20	945	953	789	1	17	8	7	21	962	962	111	122	...	...	*98 girls in Boys' schools. 91 boys in Girls' schools.

EDUCATION—SUBSIDIARY TABLE No. IV.—FOR EUROPEANS ONLY.

Return of Expenditure on European Institutions in the Central Provinces for the official year 1890-91.

Objects of Expenditure.	Public Institutions. Under Private management. Aided by the Department. Provincial Revenues.	Municipal Funds.	Fees.	Subscriptions.	Endowments and other sources.	Total.	Unaided. Fees.	Subscriptions.	Endowments and other sources.	Total.	Total of Expenditure from Provincial Revenues.	Municipal Funds.	Fees.	All other sources.	Grand Total.	Remarks.
1	2a	2b	2c	2d	2e	2	3a	3b	3c	3	4a	4b	4c	4d	4	
	Rs.	Rs.	Rs.	Rs.	Rs.	Rs.	Rs.	Rs.	Rs.	Rs.	Rs.	Rs.	Rs.	Rs.	Rs.	
Secondary Schools, English—																
For Boys... High Schools ...	500	...	202	87	250	1,039	...	...	...	..	500	.	202	337	1,039	
For Boys... Middle do. ...	5,061	800	2,365	688	1,934	10,848	...	...	...	...	5,061	800	2,365	2,622	10,848	
For Girls... do. do. ..	3,020	300	1,860	215	1,791	7,186	...	..	...	..	3,020	300	1,860	2,006	7,186	
Total ..	8,581	1,100	4,427	990	3,975	19,073	...	...	...	..	8,581	1,100	4,427	4,965	19,073	
Primary Schools, English ...																
For Boys	5,420	1,120	2,191	2,594	3,280	14,605	138	...	220	358	5,420	1,120	2,329	6,094	14,963	
For Girls	5,838	600	4,060	1,383	3,483	15,364	.	...	...	...	5,838	600	4,060	4,866	15,364	
Total ...	11,258	1,720	6,251	3,977	6,763	29,969	138	...	220	358	11,258	1,720	6,389	10,960	30,327	
Scholarship in Secondary Schools...	609	...	...	...	. .	609	...	...	...	...	609	...	...	...	609	
Do. Primary do. ...	355	...	...	...	...	355	...	...	..	..	355	...	...	...	355	
Buildings	4,197	...	...	...	1,500	5,697	...	...	...	...	4,197	...	..	1,500	5,697	
Total ...	5,161	...	...	...	1,500	6,661	...	...	...	..	5,161	...	...	1,500	6,661	
TOTAL EXPENDITURE ON EUROPEAN INSTITUTIONS.	25,000	2,820	10,678	4,967	12,238	55,703	138	...	220	358	25,000	2,820	10,816	17,425	56,061	

EDUCATION—SUBSIDIARY TABLE No. V.—FOR EUROPEANS ONLY.

Return of the Stages of Instruction of pupils in Public Schools for General Education in the European Schools of the Central Provinces, for the official year 1890-91.

Class of Schools.	Number of schools	Number of pupils on the rolls on 31st March.	High stage. Comprising all pupils who have passed beyond the Lower Secondary (Middle) Stage, but have not passed the Matriculation Examination. 1			Middle Stage. Comprising all pupils who have passed beyond the Upper Primary Stage, but have not passed beyond the Lower Secondary (Middle) stage. 2			Upper Primary Stage. Comprising all pupils who have passed beyond the Lower Primary Stage, but have not passed beyond the Upper Primary Stage. 3			Lower Primary Stage. Comprising all pupils who have not passed beyond the Lower Primary stage. Reading printed books. 4			Lower Primary Stage. Not reading printed books. 5			Total.		
			Boys.	Girls.	Total.	Boys.	Girls.	Total.	Boys	Girls.	Total.	Boys	Girls.	Total.	Boys	Girls.	Total.	Boys	Girls.	Total.
SECONDARY SCHOOLS.																				
For Boys ... Aided ... English ..	5	153	16	...	16	122	15	137	...	...	...	...	...	..	..	...	...	138	15	153
For Boys ... Unaided ... Vernacular ..	.	...	...	..	...	...	...	..	...	...	...	...	...	...	...	...	...	...	...	...
Total ..	5	153	16	...	16	122	15	137	...	..	...	...	...	...	...	...	...	138	15	153
For Girls... Aided ... English ..	4	102	...	...	...	...	102	102	...	...	...	.	...	...	...	...	...	...	102	102
For Girls... Unaided ... Vernacu'ar ..	..	...	...	...	...	...	...	...	...	...	...	...	...	...	..	...	...	..	...	...
Total ...	4	102	...	...	...	..	102	102	...	...	..	..	..	...	...	...	...	..	102	102
TOTAL SECONDARY SCHOOLS ...	9	255	16	...	16	122	117	239	..	...	..	..	...	...	...	...	...	138	117	355
PRIMARY SCHOOLS.																				
For Boys ... Aided ..	6	328	...	...	...	...	...	...	81	32	113	159	35	194	13	8	21	253	75	328
For Boys ... Unaided ..	1	17	...	...	...	...	...	...	5	4	9	4	4	8	...	...	...	9	8	17
Total ...	7	345	...	...	...	...	...	..	86	36	122	163	39	202	13	8	21	262	83	345
For Girls ... Aided ..	5	362	...	...	...	...	...	...	25	107	132	34	104	138	32	60	92	91	271	362
For Girls ... Unaided ...	.	...	..	...	...	...	..	...	...	...	...	...	..	...	...	...	...	..	..	...
Total ...	5	362	..	...	...	...	...	...	25	107	132	34	104	138	32	60	92	91	271	362
TOTAL PRIMARY SCHOOLS ...	12	707	...	...	...	...	...	...	111	143	254	197	143	340	45	68	113	353	354	707
GRAND TOTAL ...	21	962	16	...	16	122	117	239	111	143	254	197	143	340	45	68	113	491	471	962

NOTE.—The number of girls shown in this table should correspond with the number returned under Primary and Secondary Schools in Form No. III. Mixed schools should be entered as Boys' schools or Girls' schools, according as the number of boys or of girls is greater.

APPENDICES.

Appendix A.

SYLLABUS OF DEMONSTRATION WORK TO ILLUSTRATE THE AGRICULTURAL PRIMER.

Preliminary.—Exhibit the magnifying glass—show magnifying powers of a drop of water on leaf-hairs—explain general structure of the microscope and show its effect with previously prepared slides, and also with objects (such as a flea) prepared for the occasion.

Lesson I (*with the microscope*)—vorticella, rotifera (fixed animals)—desmids and diatoms (moving vegetables)—volvox (do. in early stage).

(*on the table*)—sensitive plant—examples of plants which open and close at certain hours.

(*with the microscope*)—the cellular structure of the root and stem of a plant.

Lesson II (*on the table*)—structure of the orange—plantain stem—tap roots and crown roots—root-hairs as seen on a plant dug up, and on the rootlets of a plant grown in water—proof of root suction—exhibit endosmosis with a tube closed at one end by a piece of bladder—aerial roots of the maize, bargad and orchid—compare beet with carrot, onion and potato as specimens of root and of stem development.

Lesson III (*with the microscope*)—fibro-vascular bundles in the plantain—cross sections showing their position in the plaintain and the arhar—also the thickness of cell walls.

(*on the table*)—sections of trees showing the annual growth under the outside bark—flax fibre and hemp fibre extracted from the plants.

Experiments to show transpiration—with a growing plant under a shade—then with leaves having their petioles in water and out of water.

(*with the microscope*)—stomata of leaves—chlorophyll granules.

Lesson IV (*on the table*)—cotton flower and seed.

(*with the microscope*)—anthers and pollen grains—pollen grains adhering to stigma.

Lesson V (*on the table*)—compare with cotton flower a flower of the pea tribe—a til flower—a marigold—the flowering stalk of the maize—male and female flowers of the gourd tribe—flowering stalks of the grass tribe—exhibit the Paris model of a pea flower and diagrams.

Lesson VI (*on the table*)—repeat the experiment to show endosmosis—demonstrate the existence of invisible gases by showing the effect on light and on life of oxygen and carbonic acid gas confined in jars—prepare oxygen gas from chlorate of potash or red oxide of mercury—prepare carbonic acid gas from charcoal and prove its existence by lime water—show its existence in breath expelled from lungs.

Show the evolution of oxygen gas by leaves exposed to sunlight in water—and the clearing of a jar of carbonic acid by plant action so as to render it possible to burn a light in it—illustrate the gaseous, liquid and solid conditions of matter by an experiment with sulphur.

Lesson VII (*on the table*)—compare good and bad wheat seed and cotton seed—prove by pot cultivation that a good seed of wheat or cotton will produce a finer plant than a bad seed, if indeed the latter does not fail to germinate altogether—explain the loss in sowing for wheat a large amount of seed which does not germinate.

(*in the field*)—show the effect on plants of not being crowded but having plenty of room and air.

Lesson VIII (*on the table*)—compare different kinds of wheat seed—pissi, haura, kathia, and different kinds of cotton—bani, jari, American.

Lesson IX (*on the table*)—show by cultivation in distilled water that a plant can for some time live on what it obtains from air alone.

Chemical combination—its difference from mechanical combination illustrated by an experiment with zinc and sulphur, heated and unheated—explode hydrogen and oxygen and produce water—decompose water by electricity—compare a piece of chalk with specimens of calcium, carbon and oxygen gas—contrast chalk (carbonate of lime) with pure lime (lacking carbonic acid)—prepare lime water from the latter—drive off carbonic acid from the former, and show the formation of chalk by the combination of the carbonic acid with the lime water—repeat the experiment on lime water with carbonic acid formed from charcoal—illustrate chemical combination by the formation of copper nitrate—show the rusting of iron by combination of oxygen—then drive off the oxygen from red oxide of mercury and show its reduction to pure metal and loss of weight owing to loss of oxygen.

Repeat the experiments described in the second clause under Lesson VI—show loss of weight by dessication in case of cabbage or other fleshy leaved plant—weigh a piece of green bamboo—then dessicate to show weight of water—then reduce the charcoal to show the weight of substances other than carbon and mineral constituents—then reduce to ashes to show weight of mineral constituents.

Lesson X (*on the table*)—exhibit specimens of different kinds of soils and analyze them mechanically to show various degrees of fineness.

(*in the field*)—the box system of keeping cattle and the proper storage of manure under cover.

Lesson XI (*on the table*)—effect of watering with solution of saltpetre in pot cultivation—pot cultivation with various manurial substances.

(*in the field*)—the Sewage Farm—the Ville and Manure series of experimental plots.

Lesson XII (*on the table*)—ball and ring experiment to show expansion by heat and contraction by cold—the thermometer—cracking of soils by alternate heating and cooling illustrated by heating a glass rod and cooling it suddenly—show by mechanical analysis the varying proportion of fine particles in different samples of soils.

(*in the field*)—the construction and working of the earth-turning plough.

Lesson XIII (*on the table*)—capillary action in a fine tube—in a sun dry brick—contrast with a heap of loose earth.

Lesson XIV (*in the field*)—embanking for wheat—effect of irrigation on wheat and garden crops.

(*on the table*)—illustrate the effect of irrigation in pot cultivation.

Lesson XV (*on the table*)—specimens of *kans* grass and of *agia* if procurable.

(*in the field*)—effect of allowing a field to become weedy or its plants overcrowded.

(*with the microscope*)—rust, ergot, bunt and smut.

Lesson XVI (*in the field*)—construction and use of the following implements:—
Swedish plough compared with the local Nagar.
Bakhar—Daura—Dundia—Tifan—Argara.
Chain pump, Steel lift, Moth.
Winnower, Thresher, Sugar-cane Mills.

Lesson XVII (*in the field*)—ensilage—if possible illustrate cattle disease by examination of patients in the veterinary dispensary.

Appendix B.

INSTRUCTIONS FOR THE ESTABLISHMENT AND MAINTENANCE OF SCHOOL GARDENS IN THE CENTRAL PROVINCES.

1. **Soil.**- It is a proverb with gardeners, that with the help of manure and water, good crops can be obtained from a stone. In growing ordinary field crops, such as wheat, rice or linseed, the first requisite is that the soil should be good. But in growing garden crops, manure and water are the chief requisites, and the natural quality of the soil is comparatively unimportant. Indeed some of the best agricultural soils are unsuitable for garden crops. A good garden can, for instance, never be established on the rich black soil which is so highly appreciated for rice and wheat. Because the land near the School house is poor, it does not follow that it is not suited for garden cultivation. Sandy or gravelly soils give better returns to manure and irrigation than many soils which are naturally much more fertile.

2. **Area.**—An area of one-fifth of an acre will ordinarily be quite large enough for a school garden. This is equal to 968 square yards, and might be made, for instance, by measuring off a plot 44 yards long by 22 yards broad. Very often half this area or one-tenth of an acre will suffice to commence with.

3. **Water.**—Garden crops cannot be grown without watering. This cannot be too strongly insisted upon. To establish a garden without arrangements for watering will merely end in failure and disappointment. Water can of course be given to plants by hand, but this entails great labour, and hand watering seldom suffices to bring plants to perfection in the dry months. If possible, arrangements should be made for irrigation--that is to say, for flooding the ground with water drawn from a tank, well or stream.

The simplest and easiest means of irrigation is from a tank, standing at a higher level than the garden, from which water can be brought by digging a channel. Irrigation in this way will be possible in some villages, but they will be very few in number, and generally it will be necessary to rely on a well or stream. This will of course entail the labour of lifting the water. For wells where water is within 12 feet of the surface, the best means of raising water is the lever lift (*dhenkoli, pycottah or tenra*) which consists of a seesaw with one arm very much longer than the other. To the long arm is attached a rope with a bucket. The short arm is weighted so as to assist the man in pressing it down. A man working with a lever lift of this kind can easily water from 20 to 25 square yards in half an hour. An illustration of the lever lift is given below :—

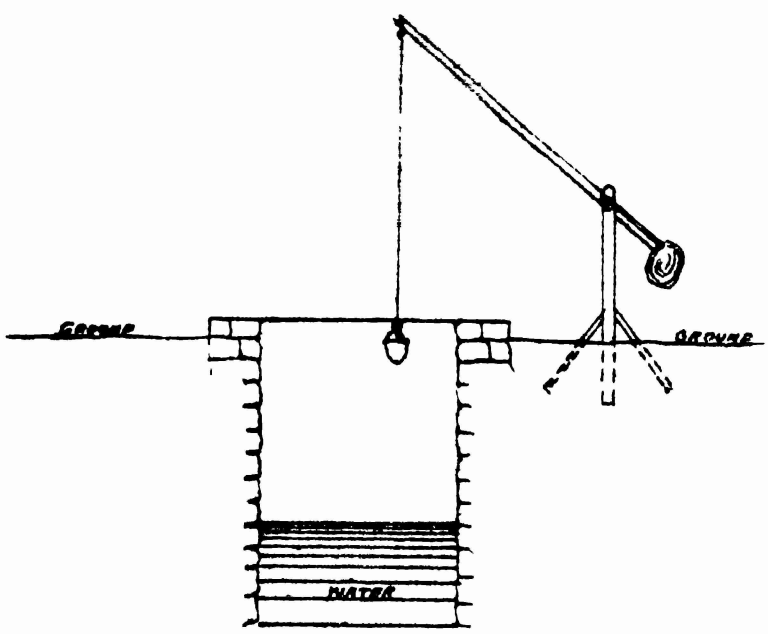

4. When water is at a greater depth from the surface than 12 feet, the best means of raising it will probably be by the use of a wooden drum carrying two small well buckets and turned by handles at either end. This instrument is roughly sketched below. With it two boys can easily lift in half an hour from a depth of 25 or 30 feet sufficient water to irrigate 10 square yards of ground :—

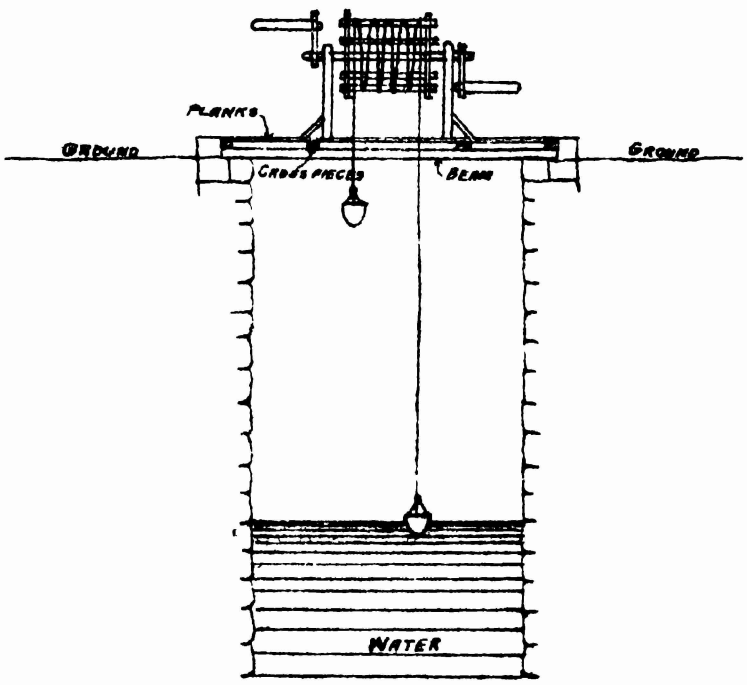

5. If (as will often be the case) there is a well in the school grounds, the garden should be irrigated as above without difficulty. So also if there is a well at no great distance from the school grounds, from which the water can be brought by making a channel. If it is impossible to bring water to the school grounds, the garden must be established outside at a place where water can be made available. In this case a rough fence of thorns will be necessary.

6. **Manure.**—Manure is not less necessary than irrigation. Without it no garden worth the name is possible. The best kind of manure is well rotted cattle dung mixed with sweepings, a supply of which can generally be obtained in the village without difficulty. In most cases the malguzar will no doubt allow one of his labourers to bring the manure to the garden. Cattle dung should not be used unless it is at least a year old. To keep a garden in first rate condition, at least 3,600 baskets of manure should be applied per acre each year. Thus, if the garden area is one-fifth of an acre, 720 baskets will be necessary. This supply should not be given at one time, but in two or three instalments. The best months for manuring are May, September and January. The manure be should dug into the ground immediately it is thrown on to it, as it rapidly spoils by exposure to the sun or rain. It must be borne in mind that the application of manure often attracts white ants unless the crop is watered shortly after manuring.

7. **Cultivation.**—In garden cultivation the mattock (faura) and the trowel (kurpi) take the place of the plough. It is essential that when first starting the garden the ground should be given a good supply of manure and should then be dug up to the depth of at least nine inches. It is absolutely essential that weeds should not be allowed to grow, and continual weeding with the kurpi is necessary. Moreover, after each watering, the surface earth should be stirred with the kurpi to prevent it from caking. If the surface soil is kept loose, the ·ound will retain its moisture much longer than if a hard cake is allowed to rm.

8. **Sowing and transplanting.**—A large number of garden crops require to be sown in a seed bed and be thence transplanted. A corner of the garden should be set apart of a seed bed. An area of 10 square yards will suffice for this. The seed bed should be rather higher than the rest of the garden so as to prevent its being flooded by rain, and should be dug up, weeded, and manured more thoroughly than the rest of the garden.

In the dry months, ground into which seedlings are to be transplanted should be watered two or three days before transplantation takes place. In transplanting, care should be taken not to damage the roots of the seedlings.

9. **Crops.**—If a garden is well manured and irrigated, vegetables and flowers of some sort or other can be produced in it during every month of the year. But the same crop should not be grown year after year on the same piece of ground. The crops should be changed about from year to year. The vegetables which are most recommended are shown in the appended Statement, which gives details of the periods when they should be sown and of the method of sowing.

To the list of vegetables given in this Statement, the following flowers may be added:—

Balsam, zinnia, coxcomb, marigold, convolvulus, sun-flower, candytuft, petunia, phlox, aster, pink and verbena.

10. It must be remembered that the time for sowing these flowers and vegetables differs somewhat in different parts of the Provinces, but the ordinary periods are shown below in calendar form:—

Month.	Sowings which are possible.
January	*Flowers.*—Petunia, verbena, pink.
	Vegetables.—Maize, ghuyan, methi, sag, lettuce.
February	*Vegetables.*—Cucumber, turai, ghiya turai, kerela, dilpasand, bhopla, dudhi, chowlai, gawar, methi, sag, lettuce.
March	*Vegetables.*—Yam, methi.
May	*Flowers*—Balsam, zinnia, coxcomb, sun-flower, marigold, convolvulus.
June	*Flowers.*—The same as in May.
	Vegetables.—Radish, cucumber, Turai, ghya turai, karela, bhopla, dudhi, dilpasand, chichanda, chowlai, val, double beans, chowdhari, gawar, bhendi, bhata, tomato, mirchi, tipari, maize, yam, ghuyan, sag.
July	*Vegetables.*—Knol-kohl, peas, beans, sag [sowings for June can also be made at the beginning of this month.]
August	*Vegetables.*—Mirchi, tipari, turnip, sweet-potato, knol-kohl, cabbage, cauliflower, radish.
September	*Flowers.*—Candytuft, petunia, phlox, aster, pink, verbena.
	Vegetables.—Carrot, onion, beet, potato, lettuce, knol-kohl, turnip, radish, onion, cabbage, cauliflower, methi, cress.
October	*Flowers.*—The same as in September.
	Vegetables.—Peas, beans, tomato, maize, garlic, lettuce, knol-kohl, turnip, radish, onion, beet, cabbage, cauliflower, methi, cress, sag.
November	*Flowers.*—The same as in October.
	Vegetables.—Cucumber, turai, ghiya turai, karela, dilpasand, bhopla, dudhi, chichanda, chowlai, gawar, bhendi, bhatta, turnips, radish, garlic, onion, beet, cabbage, cauliflower, methi, sag, lettuce.
December	*Vegetables.*—Turnips, radish, onion, ghuiyan, methi, sag, lettuce.

List of the principal vegetables which can be grown in School gardens, with brief details of method of cultivation.

Name of vegetable.		Months in which seed can be sown.	Method of sowing or transplanting.	Period taken to come to maturity.
English.	Verpacular.			
		CLASS A.—FRUIT EDIBLE.		
Cucumber ...	Kakri ...	June, November & February.	Not to be transplanted. Seeds to be sown in pairs at distances of about eight feet. In rainy season seeds to be sown on ridges. To be watered once in five days in dry weather.	From 2 to 3 months.
	Turai ..	" " "	Do. do. do.	Do.
	Ghiya turai...	" " "	Do. do. do.	Do.
	Karela ...	" " "	Do. do. do.	Do.
Vegetable Marrow...	Dilpasand ...	" " "	Do. do. do.	Do.
Red Pumpkin ..	Bhopla ...	" " "	Do. do. do.	Do.
Gourd ...	Dudhi ...	" " "	Not to be transplanted. Seeds to be sown in pairs at distances of about eight feet. In rainy season seeds to be sown on ridges. To be watered once in five days in dry weather The long kind requires to be trained upon stakes.	Do
Snake gourd ...	Chichanda ...	June and November ...	Not to be transplanted. Seeds to be sown in pairs about 5 feet apart. In rainy season seeds to be sown on ridges. To be watered once in five days in dry weather. To be trained up on stakes.	Do.
Bean ..	Chowlai ...	June, November & February.	Do. do. do.	Do.
Do. ..	Balhar or Val	June	Do. do. do.	Do.
Do. ...	Double beans.	June	Do. do. do.	About 5 months.
Do. ...	Chowdhari ...	June	Do. do. do.	From 2 to 3 months.
Do. ...	Gawar ...	June, November & February.	Not to be transplanted. Seeds to be sown in lines Seeds to be about 4 inches apart—lines to be 2 foot apart. To be watered once in 4 days in dry weather.	Do.
Okro ...	Bhendi ...	June and November ...	Not to be transplanted. Seeds to be sown in lines. Seeds to be about 4 inches apart—lines to be 1 foot apart To be watered once in 4 days in dry weather.	About 3 months
Egg plant ...	Bhata, Bengan, Brinjal,	June and November ...	Seeds to be sown in seed bed. Seedlings on 4 inches high to be transplanted in lines. Seedlings to be 1 foot apart—lines to be 2 feet apart. To be watered once in 6 days.	
Peas ...	Mattar Batra.	July and October ...	Not to be transplanted. Seeds to be sown in pairs of lines. Seeds to be 2 inches apart, lines of a pair to be 1 foot apart, and pairs of lines to be 3 feet apart. To be trained up on stakes and watered once in 4 days.	About 3 months.
Beans ...	...	Do. ...	Do. do. do.	Do.
Tomato ...	Valayeti bengan.	June and October ...	Seeds to be sown in seed bed. Seedlings when about 4 inches high to be transplanted in lines Seedlings to be 1 foot apart—lines to be 3 feet apart. To be trained up on stakes and watered twice a week.	From 2 to 3 months.
Capsium ...	Mirchi ..	June and August ...	Seeds to be sown in seed bed. Seedlings when 4 inches high to be transplanted in lines. Seedlings to be 1 foot apart—lines to be 1 foot 6 inches apart. To be watered once in 10 days in dry weather.	About 4 months
Cape Gooseberry ..	Tipari	Do. ...	Seeds to be sown in seed bed. Seedlings when 4 inches high to be transplanted in lines Seedlings to be 1 foot apart—lines to be 1 foot 6 inches apart. To be watered once a week in dry weather.	About 6 months.
Maize ...	Makka ..	June, October & January ...	Not to be transplanted. Seeds to be sown in pairs in lines. Seeds to be 6 inches apart—lines to be 1 foot apart. To be watered once in 5 days in dry weather.	About 3 months.
		CLASS B.—ROOTS AND STEMS EDIBLE.		
Kohl ...	...	July to November ..	Seeds to be sown on ridges. Seedlings to be 1 foot apart—ridges to be 1 foot apart To be watered once in 4 days.	From 2 to 3 months.

List of principal vegetables which can be grown in School gardens, with brief details of method of cultivation.—(*contd*).

Name of vegetable.		Months in which seed can be sown.	Method of sowing or transplanting.	Period taken to come to maturity.
English.	Vernacular.			
		CLASS B.	ROOTS AND STEMS EDIBLE (*Concld.*)	
Turnip ...	Salgam ...	August to January ..	To be transplanted on ridges— or may be sown on ridges and thinned out, so as to leave seedlings about 1 foot apart: ridges to be 1 foot apart. To be watered once in 4 days.	About 2 months.
Radish ...	Muli ...	June to December ...	Not to be transplanted. Seeds to be sown in lines about 9 inches apart and seedlings to be thinned out so as to leave them 3 inches apart. To be watered once in 6 days.	From 1 to 2 months.
Carrot ..	Gajar ...	September ...	Not to be transplanted. Seeds to be sown in lines about 3 inches apart and seedlings to be thinned out, so as to leave them 3 inches apart. To be watered once a week.	From 3 to 4 months.
Garlic ...	Lahsan ...	October and November ...	Seeds to be sown in seed-bed. Seedlings when 4 inches high to be transplanted in lines. Seedlings to be 3 inches apart—lines to be 9 inches apart. To be watered once a week.	About 3 months.
Onion ...	Piaz ...	September to December ...	Seeds to be sown in seed-bed. Seedlings to be transplanted 4 inches apart. To be watered once a week.	About 4 months.
Arum ...	Ghuyan ...	December, January and June.	Roots to be planted 1 foot apart. To be watered once in 4 days.	From 10 to 11 months.
Beet ...	Chukander ...	September to November ...	Not to be transplanted. Seeds to be sown in pairs in lines. Seeds to be 10 inches apart, lines to be 1 foot apart. To be watered once in 4 days.	About 4 months.
Potato ...	Aloo ...	September ...	Not to be transplanted. Large well-ripened potatoes to be cut into pieces each having 2 or 3 buds or eyes. Small ones to be planted whole. Each piece or small potato to be planted in lines, one foot apart. Lines to be 2 feet apart. As the plant grows, the earth to be ridged up on both sides of each line. To be watered once a week in dry weather.	About 4 months.
Sweet potato ..	Sakarkand ...	August ..	Cuttings or pieces of ripe branches from the old crop to be planted 1 foot 6 inches apart. To be watered once in 3 days at first and then once in 6 days.	About 5 months.
Yam ...	Mataloo ...	June and March ...	Small bulbs to be planted near trees on which they may be trained up.	About 10 months.
		CLASS C.—LEAVES AND FLOWERS, EDIBLE,		
Cabbage ...	Gobi ...	August to November ...	Seeds to be sown in seed bed. Seedlings when 4 inches high to be transplanted. Seedlings to be 2 feet apart—lines to be 2 feet apart. Insects which infest the plant to be picked out and killed, and the plants to be dusted with wood ashes. To be watered once in 4 days.	About 4 months.
Cauliflower ...	Phul gobi ..	Do.	Do. do. do.	Do.
Lettuce ..	...	September to March ..	Seeds to be sown in seed bed. Seedlings to be transplanted 9 inches apart. To be watered slightly once a day in dry weather. If inclined to spread, the outer leaves to be tied together at the top.	About 15 days.
Fenugreek ...	Bhaji methi .	Do.	Not to be transplanted. Seed to be sown broad-cast. To be watered once in 2 days in dry weather.	Do.
Cress ...	Halim ...	September and October ...	Not be transplanted, but sown broad-cast.	About a m
Amaranth ...	Sag ...	June and July with irrigation. October to February.	Not to be transplanted, but sown broad-cast.	Do.

NOTE.—In sowing seeds, 2 seeds should be sown together. If both germinate, the weaker one to be picked out.
To ensure a continuous supply of any kind of vegetable, seed should be sown at intervals of 15 days or 1 mon

Appendix C.

Curriculum of Anglo-Vernacular Middle Schools.

	Class. I. One year's course.	Class II. One year's course.	Class III. One year's course.	Class IV. One year's course.
		Compulsory Subjects.		
1. Manual training ...	As in 4th Vernacular Class. ..	As in 5th Vernacular Class. ..	As in 6th Vernacular Class ...	As in 6th Vernacular Class, with greater proficiency.
2. Drawing (Optional after Class I.)	As in 4th Vernacular Class. ..	.....	.....	.....
3. Vernacular language.	As in 4th Vernacular Class. ...	As in 5th Vernacular Class.	As in 5th Vernacular Class. Revision.	As in 6th Vernacular Class.
4. English Reading and Grammar.	(1) Howard's Primer with translation and explanation in the vernacular. (2) Nelsan's Royal Reader No. 1 (omitting page 32) or other similar Text-book approved by the Department, with translation. 2nd half-year. (3) Bhashantar Pathmala, Part I. Weekly written exercises in translation into English. Grammatical Primer. Analysis of simple sentences. Parts of speech. To be taught in connection with the reading lesson.	(1) Nelson's Royal Reader No. II, or other similar text-book, with translation and explanation in the vernacular. Weekly written exercises in translation into English. 40 lines of poetry to be committed to memory and explained. Grammatical Primer. Parts of speech. Easy parsing and Analysis in 2nd half-year. To be taught in connection with the reading lesson.	(1) Nelson's Royal Reader No. III, or other similar text-book, with translation and explanation in English and in the vernacular. Weekly written exercises in translation into English. 60 lines of poetry to be committed to memory and explained. Revision of Grammatical Primer, with parsing and easy analysis. To be taught in connection with the reading lesson.	Nelson's Royal Reader No. IV, or other similar text-book approved by the Department, with translation and explanation in English and in the vernacular. Weekly written exercises in translation into English. 100 lines of poetry to be committed to memory. Manual of Grammar. Parsing and easy analysis. Kinds of clauses. To be taught in connection with the reading lesson.
5. English writing and spelling.	Large and half-text hand on slates, (1st half-year). Large and half-text hand, in copy books (2nd half-year). Dictation from the Reader (2nd half-year).	Large and half-text hand, in copy books. Dictation from the reading book in use.	Half-text and small hand in copy books. Dictation from the reading book in use. Letter writing. Books of School exercises to be exhibited, each page to be dated and signed by the pupil.	Small hand in copy books. Books of school exercises to be exhibited, each page to be dated and signed by the pupil. Dictation and letter-writing.

Curriculum of Anglo-Vernacular Middle Schools.—(Contd.)

	Class I. One year's course.	Class II. One year's course.	Class III. One year's course.	Class IV One year's course.
6. Arithmetic.	As in 4th Vernacular Class.	Vulgar and decimal fractions, simple and compound proportion. Practice. Exercises in Mental Arithmetic.	The whole (omitting square root, cube root, discount, stocks and exchange). Mental Arithmetic, a more advanced course.	The whole (omitting discount, stocks and exchange, and cube root). Mental Arithmetic, a more advanced course.
7. Object Lessons or Elementary science.	As in 4th Vernacular Class.	The elements of physical science, as in Balfour Stewart's Primer, or other similar text-book, viz., definitions, the chief forces of nature, gravity, the three states of matter, properties of solids, liquids and gases.	Revision of the portion studied in Class II. Moving bodies, vibrating bodies.	Revision of the Primer. Heated bodies, electrified bodies.
8. Geography.	As in 4th Vernacular Class.	Revision in English, Asia and Europe. Maps of Asia and India to be drawn. Latitude and Longtitude. Annual motion of the earth. The seasons.	Revision, America and Africa, maps of Europe and America to be drawn. Physical Geography of India, phases of the moon, wind, rain, dew.	Revision and General Geography, with special reference to the British Empire. Map drawing. The Commercial Geography of India. The solar system. Circumstances that determine climate.
9. Geometry.	.....	.....	.....	The first 26 propositions of the 1st book of Euclid, with exercises.
10. Algebra.	.....	.....	The first four rules.	The first four rules. Factors. L. C. M., G. C. M. Easy fractions.
11. Sanitation.	As in 4th Vernacular Class.	.....	.....	.....

		OPTIONAL SUBJECTS.		
*1. Drawing Standards.	.....	Free-hand and model as in 5th Vernacular Class. Practical Geometry. Burchett-Problems 1-30 and problems 33 and 37.	Free-hand and model as in 6th Vernacular Class. Revision of Burchett. Construction of the ellipse by means of the trammel.	Free-hand, model, perspective and geometrical drawing, as in 6th Vernacular Class.
2. Mensuration.	.....	.....	Surfaces	Surfaces and solids.
3. History.	As in 4th Vernacular Class.	As in 5th Vernacular Class.	As in 5th Vernacular Class. Revision.	Hunter's History of India, or other similar text-book. The whole.
4. Mercantile Arithmetic and Commercial Correspondence.	.....	.....	.....	As in Adam and Ramanujachariar's Commercial Arithmetic. Problems in practice, bills of parcels, interest discount, practice, profit and loss, tare and tret, averages and percentages, exchange, commission, brokerage. As in Adam's Commercial Correspondence or other similar book. Docketing, indexing short abstracts, addresses, filling in forms such as receipts, cheques, promissory notes, bills of lading, bills of exchange, Bank hypothecations and insurance letters, &c.

Curriculum of Anglo-Vernacular Middle Schools.—(Concld.)

	Class I. One year's course.	Class II. One year's course.	Class III. One year's course.	Class IV. One year's course.
		Optional Subjects.—(Contd.)		
5. Surveying (where practicable).	.....	.....	With plane-table and cross-staff ...	With plane-table and cross-staff.
6. Sanskrit (where practicable).	.....	.....	For students whose vernacular is Hindi or Marathi— Ramkrishna Gopal Bhandarkar's 1st Sanskrit book. An Upakramanika may be learnt by each boy.	2nd Sanskrit book by Ramkrishna Gopal Bhandarkar, the first twelve chapters, and revision of 1st book.
7. Persian (where practicable).	.....	.....	(1). For students of Urdu, Dastur-us-Sabyan, a few letters to be learnt by heart; and Karima. (2). Grammar. Amadnama and Qu-waid-i-Farsi or Zawabit-i-Farsi. Translation of easy sentences from Urdu into Persian.	(1). Nigaro-i-Danish (selections). (2). Grammar. Zawabit-i-Farsi, or the Chahar-Gulzar. (3). Exercises in translation from Urdu into Persian to be done twice weekly.

N. B.—Not more than three optional subjects can be taken.

* The standards in drawing are irrespective of classes. Thus a student of the first class may be in the highest standard, and a student of the 4th class in the lowest standard in drawing. Promotion from standard to standard may be made, as soon as each boy is considered fit for promotion.

Curriculum for Vernacular Schools.

	Class I. One year's course.	Class II. One year's course.	Class III. One year's course.	Class IV. One year's course.	Class V. One year's course.	Class VI. One year's course.
			Compulsory Subjects.			
1. Kindergarten occupations and manual training.	The first 4 occupations.	The first 6 occupations.	1. Modelling in clay, Ricks Book I, Chapter X, pages 59—65. 2. Paper folding, cutting and mounting.	1. Exercises in wood-work with the knife, Ricks Book II, Chapter V. p. 34 35, or, 2. Modelling in clay, Ricks Book I, Chapter X, p. 66 and Models of natural objects, proposed by the teacher, or 3. Drawing, cutting and mounting, Ricks Book I, Chapter V.	1. Wood-work, Ricks Book II, Chapter V, pages 35—37, and Chapter VI, pages 41—43, or 2. Folding, cutting, mounting, designing in form and colour, Ricks Book I, pages 41—45, and similar exercises. Drawing and cutting geometrical forms, Book I, Chapter VIII, or 3. Drawing, colouring, &c., Ricks Book I, Chapter VI, or 4. Modelling in clay as in Class IV, with greater proficiency.	1. Wood-work, Ricks Book II, Chapter VII, pages 46—53. or 2. Folding, cutting, mounting and designing in form and colour, Ricks Book I, Chapter VII, page 46 and similar exercises. or 3. Modelling in Card-Board, Ricks Book I, Chapter IX, pages 54—56, or 4. Modelling in clay as in Class V, with greater proficiency.
2. Drawing (Optional after Class IV).	Free-hand on slates, straight lines and their combinations, squares, triangles, oblongs.	Free-hand on slates, straight lines and their combinations, a more advanced course.	Free-hand on paper, curved lines and their combinations, easy familiar objects, from copies.	Free-hand on paper, leaves, flowers. Familiar objects, from copies.	.....	

Curriculum for Vernacular Schools.—(Contd.)

	Class I. One year's course.	Class II. One year's course.	Class III. One year's course.	Class IV. One year's course.	Class V. One year's course.	Class VI. One year's course.
3. Reading and Grammar.	The alphabet and reading sheets in Hindi, Marathi, Uriya, Urdu and Telugu, supplied to Departmental schools. Hindi.—30 pages of the Departmental 1st book. Marathi.—Balbodh, Departmental 1st book. Uriya.—Departmental 1st book. Urdu.—34 pages of Departmental 1st book. Telugu.—1st book. Recitation of 10 lines of easy verse.	Hindi.—Departmental 1st book, the whole, and 20 lessons of Book II. Marathi.—Departmental Balbodh 2nd book and Modi 1st book. Uriya.—Departmental 2nd book. Urdu.—Departmental 1st book, the whole, and 20 lessons of Book II. Telugu.—2nd book. Recitation of 30 lines of easy verse.	Hindi.—Departmental 2nd book, and 25 lessons of Book III. Marathi.—Departmental Balbodh 3rd book and Modi 2nd book. Uriya.—Departmental 3rd Reader. Urdu.—Departmental 2nd book and 25 lessons of Book III. Telugu.—3rd book, 70 lines of Sumatisatacam. Recitation of 50 lines of verse, with explanation of the meaning.	Hindi.—Departmental 3rd book. Marathi.—Departmental Balbodh 4th book, and Modi 3rd book. Uriya.—Departmental 4th book. Urdu.—Departmental 3rd book. Telugu.—Panchatantram pages 1 to 72. Nitisangraham, first 50 verses. Recitation of 80 lines of poetry with explanation of the subject matter and allusions.	Hindi.—The prose part and easy poetry of 4th Departmental book. Marathi.—Departmental Balbodh 5th book, and Modi 4th book. Uriya.—Prabandha Mala and the first half of Ayodhyakand Ramayan by Fakir Mohan Senapati. Urdu.—Departmental 4th book to page 184. Telugu.—Panchatantram, the whole. Nitisangraham, 50th verse to the end. Recitation of 100 lines of poetry with explanation of the subject matter and allusions.	Hindi.—4th Departmental book, the whole, and Remayan Aranya or Ayodhyakand. Marathi.—6th Departmental book. Uriya.—Raghuvansha and the remainder of Ayodhyakand Ramayan by Fakir Mohan Senapati. Urdu.—Departmental 4th book, the whole. Telugu.—Nitichandrika, 1st half. Nalacharitram, 1st half. Recitation of 140 lines of poetry with explanation of the subject matter and allusions.
		Subject and predicate. To be taught in connection with the reading lesson.	Subject, predicate, object, nouns, pronouns, adjectives and verbs. To be taught in connection with the reading lesson.	Analysis of simple sentences, and parts of speech. To be taught in connection with the reading lesson.	The elements of grammar as in any grammar used in the Upper Primary class of a Government school. Prosody to be omitted. Analysis. To be taught in connection with the reading lesson.	Syntax and prosody. Rules of Sandhi and Samas. Easy derivation. To be taught in connection with the reading lesson.

			COMPULSORY SUBJECTS.– (Contd.)			
*4. Writing and spelling.	Large hand on slates, letters and words from the reading sheets Copying words and sentences from the reader, and dictation.	Large hand on paper. To write to dictation from the reader in use.	Text or medium size on paper. To write to dictation from the reader in use.	Small hand. To write to dictation from the reader in use.	Small hand. Dictation from the reading book in use. To write from memory the subject-matter of any short story from the reader in use, or to write a short letter. Books of school exercises to be exhibited, each page to be dated and signed by the pupil.	Small hand. Dictation from the reading book in use. To write a short letter descriptive of some place known to the pupil, or of some event within his experience. Books of school exercises to be exhibited, each page to be dated and signed by the pupil.
5. Arithmetic ..	(1). Instruction in the subject to be by means of the ball-frame or with cowries, the scholars, thus, being taught by sight and touch. Notation and numeration to 1,000. The multiplication tables to 10×10 Simple addition and subtraction. (2). Mental exercises in the addition and subtraction of pice, annas and rupees, the totals not to exceed Rs. 5.	(1). Notation and numeration to 10,000. The 4 simple rules Multipliers and divisors not to exceed 2 figures. Multiplication tables to 16 times and fractional tables to 2½ Tables of weights and measures in common use to be learnt and applied. (2). Mental exercises in the addition and subtraction of pice, annas and rupees, the totals not to exceed Rs. 10.	(1). Simple and compound rules. Reduction. (2). Mental application of the simple and compound rules and of fractional tables to easy bazar problems.	(1). Simple proportion L. C. M. and G. C. M.. vulgar fractions. Simple interest, the addition, subtraction, multiplication and division of easy decimals, the conversion of vulgar fractions into decimals and *vice versa*. Easy problems. (2). Mental Arithmetic Exercises in the ordinary rules for Mental Arithmetic as known in the bazar.	Simple and compound proportion, vulgar and decimal fractions. Practice, simple interest, square root. Problems. Mental Arithmetic, a more advanced course.	The whole (excluding stocks and exchange and cube root).

* In Marathi schools, both Balbodh and Modi should be written, except in Class I, in which Balbodh only need be written.

Curriculum for Vernacular Schools.—(Contd.)

	Class I. One year's course.	Class II. One year's course.	Class III. One year's course.	Class IV. One year's course.	Class V. One year's course.	Class VI. One year's course.
			COMPULSORY SUBJECTS.—(Contd.)			
6. Object lessons or Elementary science.	Common objects, such as familiar animals, plants, metals and substances employed in ordinary life (2nd half year).	As in Class I, a more advanced course.	As in Class II, a more advanced course.	An elementary knowledge of animals and plants, with special reference to agriculture, and of metals and other substances employed in the arts and manufactures carried on in the district in which the school is situated.	The elements of Physical science as in Balfour Stewart's Primer or other suitable text book, *viz.*, definitions, the chief forces of nature, gravity, the three states of matter, properties of solids, liquids and gases, moving bodies.	Revision of the Primer, vibrating bodies, heated bodies, electrified bodies.
7. Geography.	...	To explain a plan of the school-room which has been drawn to scale from measurements taken by the children; children to mark on the plan the position of the benches, &c. The 4 cardinal points, a knowledge of the town or village in which the school is situated studied from a map of the locality.	Special knowledge of the Geography of the district in which the school is situated, together with ability to point out, on the map, the districts, towns and rivers of the Central Provinces.	Geography of the Central Provinces and of India. Outlines of the world. The causes of day and night Diurnal motion of the earth.	The geography of the world with special reference to Asia and India. Latitude and longitude, annual motion of the earth, the seasons, the tides, the monsoons and eclipses to be understood.	(1). The world, with special reference to the British Empire. (2). Map of Europe and the British isles to be drawn. (3). Elementary Physical Geography, wind, rain, climate, storms, phases of the moon, the solar system.
8. Agriculture (in rural schools).	...	...	...	Fuller's Primer, the 1st half	Fuller's Primer, the whole.	Revision of portion read.

			COMPULSORY SUBJECTS.—(Concld.)			
9. Sanitation.		...	...	"The Way to Health" or other suitable Text book. (One hour per week).	...	...
10. Needle work (for girls only).	Threading needles and hemming (to be fixed by the teacher). Knitting on the frame.	Running, stitching and top-sewing (to be fixed by the teacher). Knitting on two needles.	Felling, gathering to sew a child's jacket (fixed by the teacher), to knit a scarf, plain and purl.	Mending, herring-boning, to set and sew a child's jacket, knitting on 4 needles, cross-stitch.	To cut out, fix and sew a petticoat, jacket, bodice, knit socks, copy cross-stitch from a pattern, button-holing.	As in Class V, showing improved work. Neat patching and darning.
			OPTIONAL SUBJECTS.			
*1. Drawing.	...	...	...	...	Free hand as in Class IV, a more advanced course. Model drawing, Geometrical drawing, Burchett problems 1 to 30 and problems 33 and 37.	Free-hand and Model drawing as in Class V., a more advanced course. Perspective (linear). Geometrical drawing. The construction of the ellipse by means of the trammel. Burchett Revision, and problems 1 to 105, omitting numbers, 6, 13, 16, 34, 35, 36, 39, 41, 43, 44, 45, 48, 50, 51, 52, 55, 57, 58, 59 and 60.
2. Mensuration.	...	...	...	...	Surfaces.	Surfaces and solids.
3. Geometry.	...	...	...	...	...	26 Propositions of the 1st book of Euclid, with easy exercises.

* The standards in drawing are irrespective of classes. Thus a student of the 1st Class may be in the highest standard and a student of the 6th Class in the lowest standard in drawing. Promotion from standard to standard may be made, as soon as each boy is considered fit for promotion.

Curriculum for Vernacular Schools.—(Concld).

	Class I. One years' course.	Class II. One year's course.	Class III. One year's course.	Class IV. One year's course.	Class V. One year's course.	Class VI. One year's course.
			Optional Subjects.—(Concld).			
4. Algebra.	...	...	...	...	...	First four rules. Factors L. C. M. and G. C. M. Easy fractions, and simple equations.
5. History.	...	...	...	India, the English period...	The main facts of the History of India.	Hunter's History of India, or other similar Text book, the whole.
6. Surveying (where practicable).	...	...	...	...	With plane-table and cross-staff.	With plane-table and cross staff.
7. Agriculture (in urban schools).	...	...	...	Fuller's Primer, the 1st half.	Fuller's Primer, the whole.	Revision of portion read.

N. B.—Not more than four Optional subjects can be taken.

Appendix D.

No. 7259.—The following rules regarding the qualifications required of candidates for appointments, other than menial, in the Revenue and Judicial branches of the Government Service in the Central Provinces have been made by the Chief Commissioner, and are published for general information :—

I. Except in the case of posts to which a European may be appointed, no person shall be admitted to the Government Service who is not a Native of the Central Provinces.

NOTE.—The words "A Native of the Central Provinces" include any person born and domiciled within the Central Provinces of parents habitually resident there, and not established there for temporary purposes only.

II. No one shall be appointed to a post the pay of which does not exceed Rs. 15 per mensem unless he shall have passed the Upper Primary Examination.

III. No one shall on first entering the service of Government, be appointed to a post the pay of which

(*a*) exceeds Rs. 15 but does not exceed Rs. 30, (*b*) exceeds Rs. 30,	unless he shall have passed	(*a*) the Middle School Examination; (*b*) the Matriculation Examination.

IV. No person who is already in the service of Government shall be promoted to a post the emoluments of which are such as are described in Rule III unless, (1) he shall have passed the examination prescribed by that rule, or (2) his promotion has been specially sanctioned. If the pay of the post to which he is to be promoted under special sanction exceeds Rs. 30, the sanction of the Chief Commissioner will be required ; in other cases the sanction of the Commissioner is sufficient.

V. No person, not being already a servant of Government, shall ordinarily be appointed to be a Tahsildar, Munsiff or Naib-Tahsildar unless he shall have passed the F. A. Examination of some Indian University or is qualified, under the rules in force, for enrolment as a Pleader of the Second Grade in the Courts of the Central Provinces.

In promoting persons already in the service of Government to be Tahsildars, Munsiffs or Naib-Tahsildars preference will, as a rule, be given to those who possess the qualification above described.

All direct appointments to the post of Tahsildar, Munsiff or Naib-Tashildar shall be on probation, and no person will be confirmed as such unless he shall have passed the Departmental Examination by the Lower Standard in the branches noted below within two years of his appointment : —

(*a*) if a Tahsildar	...	All branches.
(*b*) if a Munsiff or Naib-Tahsildar	...	Civil and Revenue Law and Procedure.

VI. No person, not being already a servant of Government, shall ordinarily be appointed to be an Extra-Assistant Commissioner unless he shall have passed the *B. A. Examination of some Indian University, or is qualified, under the rules in force, for enrolment as a Pleader of the Second Grade in the Courts of the Central Provinces.

* In the case of Europeans an education which is, in the opinion of the Chief Commissioner, of a similar standard is required.

In promoting persons already in the service of Government to the rank of Extra-Assistant Commissioner preference will, as a rule, be given to those who possess the qualification above described, and no person shall be ordinarily so promoted, unless : —

(*a*) he possesses a sufficient knowledge of English to be able to conduct his judicial proceedings in that language, and

(*b*) he shall have passed the Departmental Examination by the Higher Standard in all its branches.

All direct appointments to the rank of Extra-Assistant Commissioner shall be on probation, and no person will be confirmed as such unless he shall have passed the Departmental Examination by the Higher Standard in all its branches within two years of his appointment.

NOTE.—The rules affecting Extra-Assistant Commissioners are subject to any modifications which the Government of India may order hereafter in constituting the Provincial Service.

Appendix E.

No. 3375.—The Chief Commissioner is pleased to sanction the following rules regarding the Upper Primary Examination.

Objects of examination

1. The objects of the examination are :—

to regulate admission into a Vernacular Middle School and into the 1st (English) class of an Anglo-Vernacular School; to regulate the award of Middle School Scholarships; to test the fitness of candidates for admission into the lower grades of the public service; and generally to promote and encourage primary education.

To whom open

2. The examination shall be open :—

(1) to all pupils of the 4th class of a Vernacular Primary School or Department or 4th Standard of result aided school. Such candidates are referred to in this Notification as "pupils":

(2) to all other persons whose age does not exceed 25 years, and such other persons of greater age as may be permitted to appear for the examination with the sanction of the Local Administration. Such candidates are referred to as "others."

How and by whom conducted

3 The examination shall be under the control and management of the Inspector-General of Education, and shall be conducted, in each district, by a Board or Boards of Examiners appointed by that officer.

Constitution of Board

4. The Board or Boards shall each consist of a Chairman and not less than two other members, one of whom, at least, shall be non-official. If there be more Boards than one in any district, the Chairman and members of one Board may serve on other Boards.

Where and when to be held

5. The examintion shall be held in each district, annually, during the months of January, February and March, at such centres as the Inspector-General may approve; but it shall be left to the Chairman of the Board to fix the dates and the order of time according to which the examination shall be conducted at each centre, and generally to arrange for the conduct of the examination, subject to the control of the Inspector-General of Education.

Standard of examination.

6. The examination shall be conducted mainly in accordance with the curriculum of the 4th Vernacular class of Government Schools.

Subject of examination.

7. The subjects of examination are as follows :—

A.—*Compulsory subjects.*

1. Manual training.
2. Reading and elements of Grammar.
3. Handwriting, spelling and dictation.
4. Arithmetic.

B.—*Optional subjects.*

1. Common objects.
2. Geography.
3. History.
4. Drawing.
5. Hygiene.
6. Agriculture.

Subjects qualifying for a pass

8. In order to pass the examination in full, a candidate must pass in the four compulsory subjects and in, at least, two optional subjects. Provided that candidates from Result aided Schools in which Kindergarten occupations and manual training are not taught need not pass in Manual training.

Failure in compulsory and optional subjects.

9. A candidate failing in any of the compulsory subjects shall be required to undergo examination again in all the compulsory subjects; but failure in any optional subject shall not necessitate re-examination in any other than that particular subject.

10. Successful candidates shall be arranged in order of merit, in two classes. The first class shall consist of those who have obtained 50 per cent, and the 2nd class of those who have obtained 30 per cent. of the maximum marks.

Arrangement of passed candidates.

11. As soon as possible after the completion of the examination, the Chairman shall furnish the Inspector-General of Education, through the Inspector of Schools, with separate lists giving the names in each list of those who have passed—

Publication of results.

(1) in the four* compulsory subjects and in two or more optional subjects ;
(2) in the four* compulsory subjects only ;
(3) in optional subjects only.

The lists shall be published in the *Central Provinces Gazette.* The Chairman shall furnish the Inspector-General with a brief report on the examination, showing the number of schools and candidates at each centre classified as "pupils" and "others" and such other information as may be required.

12. Certificates signed by the Chairman of the Board by whom the examination was conducted, and countersigned by the Inspector of Schools, shall be issued to candidates who have passed the examination in full. The certificates will be in the form appended to this Notification.

Certificates.

13. (1) Candidates who obtain certificates, will, on attaining the age of 17, be eligible for appointments in the Revenue and Judicial branches of the Government service or in service under a Local Body, the pay of which does not exceed Rs. 15 per mensem.

Value of certificates.

(2) No candidate will be eligible for admission into a Vernacular Middle School or into the 1st (English) class of an Anglo-Vernacular School, unless he obtains a certificate.

14. The managers of result aided schools may present the 4th Standard of their schools at the examination, and will receive grants in accordance with the provisions of *Central Provinces Gazette* Notification No. 4767, dated the 1st August 1890, Section B (2), and Appendix D.

Result grants to pupils.

15. Middle School Scholarships shall be awarded on the results of the examination, subject to the Scholarship rules.

Middle School Scholarships.

16. The prizes in Agriculture and Common objects prescribed in the Chief Commissioner's Minute of the 4th April 1888 on Technical education, paragraphs 15 and 16, shall be awarded on the results of the examination.

Prizes in Agriculture and Common objects.

17. These rules shall come into force on the 1st January 1892.

Date on which these rules shall come into force.

FORM OF UPPER PRIMARY CERTIFICATE.

This is to certify that _____,

a student of the _____ School, aged _____
a private candidate

years, has passed the Upper Primary Examination in the compulsory subjects, and in the following optional subjects, as prescribed in Notification of the Chief Commissioner, No. 3375, dated the 3rd June 1891.

Signed—Chairman of the Board for conducting the Upper Primary Examination in the ——district.

Countersigned—Inspector of Schools.

* Three in Result aided schools.

Appendix F.

No. 3855.—The Chief Commissioner is pleased to sanction the following Rules regarding the test examinations to be passed by Deputy Inspectors of Schools and others :—

I.—Except in special cases, and with the express sanction of the Local Government, no one shall be eligible for confirmation in the appointment of Deputy Inspector, unless—

(*a*) he has passed the F. A. Examination ;
(*b*) he has passed the Test Examination for Deputy Inspectors, prescribed by these Rules ;
(*c*) he has obtained at least an Ordinary certificate in the Teachers' Certificate Examination.

II.—In selecting candidates for officiating vacancies in the grade of Deputy Inspectors, preference will be given to those who have passed the Test Examination for Deputy Inspectors.

III.—The Test Examination will be held annually in the month of May: and will be conducted by a Board appointed by the Inspector-General of Education. The examination embraces (A) a Language test and (B) a test in administrative details. The character of each test is set forth in Rule VI. Each test may be passed separately

IV.—Teachers in Schools and Colleges, who wish to qualify for appointments as Deputy Inspectors, may, with the permission of the Inspector-General of Education, appear for the Test Examination.

V.—A Deputy Inspector, who has passed Test A in one vernacular, may, with the permission of the Inspector-General of Education, appear for examination in the colloquial of any one of the languages (not being his mother tongue) spoken by the undermentioned indigenous tribes of the Central Provinces :—

Gonds.
Khonds.
Kurkus.
Kois.
Halwas.

A reward of Rs. 200 will be paid to a Deputy Inspector who passes in the colloquial of an indigenous tribe.

VI.—The following are the tests, referred to in the preceding Rules :—

A.—*Language Test.*

The candidate will be required to pass in some one of the following languages (not being his mother tongue) *Hindi* (with knowledge of both Devanagri and Arabic characters); *Marathi, Uriya* or *Telugu*—according to the standard given below :—

(1).—Ability to translate into English, in writing and *vivâ voce*, passages in the vernacular, selected from standard authors, equivalent in difficulty to those prescribed for the Matriculation Examination of the Calcutta or Madras Universities, and to answer questions on grammar and idiom.

(2). Ability to translate from English into the vernacular a passage from a standard English author.

(3). Ability to converse with ease and fluency in the vernacular with a native on such subjects as may be selected by the Examiners.

B.—*Administrative Test.*

The candidate will be required to display a competent knowledge of the following subjects :—

(1). The general duties of a Deputy Inspector, including the drafting and docketing of letters and precis-writing.

(2). The Central Provinces Education Manual.

(3). The topography and population statistics of the circle in which the candidate is serving or wishes to serve.

Appendix G.

No. 7224.—The Chief Commissioner is pleased to sanction the following *rules regarding rates of fees to be charged in the Colleges and Public schools of the Central Provinces, in supersession of all previous rules on the subject.

The rules will come into force on the 1st April 1891.

A.—Colleges, their High School Departments, and High Schools.

(1). *Government Colleges, their High School Departments, and Government and Board* High Schools.*

The School year.

1. The school year for fee purposes is divided into two terms ending on the 30th September and 31st March, respectively.

Term fee though payable by instalments is due for the term.

2. The term fee though payable by instalments is due for the term.

Rate of term fee.

3. The rate of term fee payable is as follows:—

(1). Jubbulpore College ... { for the College Department Rs. 15. for the High school Rs. 12.

(2). Saugor, Raipur and Sambalpur High schools. } Rs. 9.

Instalments when payable.

4. The term fee shall be paid in two equal instalments on the following dates :—

1st term ... { 1st instalment, on the date of the reopening of the institution after the summer vacation. 2nd instalment, on the 15th August.

2nd term ... { 1st instalment, on the 15th October. 2nd instalment, on the 1st January.

Free scholars.

5. Free scholars may be admitted up to a maximum of 5 per cent in each Department.

(2). *Aided Colleges, their High School Departments, and Aided High Schools.*

Rates of fees in aided Colleges, &c.

6. The minimum rates of fees in aided Colleges, their High School Departments and aided High Schools shall be as follows :—

College Department. { Rs. 2 per mensem, payable monthly or by instalments, as above, at the discretion of the Manager.

High school Department or High school. { Re. 1 per mensem, payable monthly or by instalments as above, at the discretion of the Manager.

Free scholars.

7. Free scholars may be admitted, up to a maximum of 20 per cent, in the College Department, and up to a maximum of 10 per cent in the High School Department, or High School.

Accounts of fees.

Accounts of fees to be kept.

8. The Principal of every College or High School, whether Government, Board or Aided, shall enter in the General Register the amount of fees levied from each boy. In the case of Government and Board institutions, the fees should be paid into the treasury, on the date of receipt mentioned in paragraph 4 above.

B.—Middle and Primary Departments of High and Middle Schools, and Primary Schools.

(1). *Middle and Primary Departments of Government and Board High and Middle Schools, and Government and Board Primary Schools.*

Grading of students for fee purposes according to the income of their parents or guardians.

9. For fee purposes, the students shall be graded according to the income of their parents or guardians, as noted below :—

1*st grade.* Persons in receipt of annual income not exceeding Rs. 350.

2*nd grade.* Persons in receipt of annual income above Rs. 350, but not exceeding Rs. 2,000.

3*rd grade.* Persons in receipt of annual income above Rs. 2,000.

---

*In these rules, "Board School" means a School under the management of a District Council or Municipal Committee.

Rates in the Middle and Primary Departments of Government and Board High schools and Anglo-Vernacular Middle schools.

10. The rates of fees in the Middle and Primary Departments of Government and Board High schools and of Anglo-Vernacular Middle schools shall be as follows :—

Middle Department and Upper Primary Department (Anglo Vernacular).	1st grade, annas 6. 2nd grade, annas 12. 3rd grade, Rupees 3.
Vernacular Upper and Lower Primary Department.	1st grade, annas 2. 2nd grade, annas 4. 3rd grade, Rupee 1.

Rates in the Middle and Primary Departments of Government and Board Vernacular Middle schools and Government and Board Primary schools.

11. The rates of fees in the Middle and Primary Departments of Government and Board Vernacular Middle schools and Government and Board Primary schools, shall be as follows :—

Middle Department	1st grade, annas 2. 2nd grade, annas 4. 3rd grade, Rupees 2.
Primary Department or Primary school.	1st grade, *anna 1. 2nd grade, annas 2. 3rd grade, annas 8.

* The Children of parents whose income is below Rs. 120 per annum shall be charged one-half anna only.

Principle on which grading is to be carried out.

12. Grading for the purpose of rule 9 above, shall be carried out by the School Committees, under the guidance, in the case of Board schools, of District Councils, Local Boards or Municipal Committees, as the case may be. In estimating income the School Committee shall adopt the following rules :—

(1). The Pandhri or Income-tax lists, in the case of persons paying Pandhri or Income-tax, should be followed.

(2.) In the case of proprietors paying land revenue or of Muafidars, a payment or remission of Rs. 100 may be accepted as equivalent to an income of Rs. 60.

(3). In the case of other agriculturists, their net income, after making an allowance for the cost of agricultural operations, should be estimated, or they should be assessed on their rents or ploughs, should this alternative seem desirable.

(4). In the case of persons whose incomes are derived from sources other than the above, all sources of income should be taken into consideration.

Records of grounds of classification.

13. The School Committee shall enter, in the Minute book, a brief record of the grounds of the classification assigned by it to each parent or guardian.

Fees payable in advance.

14. All fees are payable monthly in advance, and should be collected before the 10th of the month for which they are due.

Free scholars.

15. In the Middle Departments of Government or Board High and Middle schools, not more than 10 per cent, and in the Primary Departments of the same schools, and in Government or Board Primary schools, not more than 20 per cent of the number enrolled, may be admitted as free scholars: provided that no student can be admitted as a free scholar, the annual income of whose parents or guardians exceeds Rs. 75. Any proposal to increase the number of free scholars above this limit or to reduce the rate of fee in particular cases must be referred, through the Inspector of Schools, to the Inspector-General of Education, who may extend the limit or reduce the fee on good grounds shown.

Collection of fees by Chaprasis.

16. The collection of fees by Tahsil Chaprasis is expressly forbidden.

Fees how disposed of.

17. In the Middle and Primary Departments of Government and Board High and Middle schools and in Government and Board Primary schools (District Council Vernacular Middle and Primary schools mentioned below being excepted), the fees must be paid into the treasury and credited to Government or the Local body concerned, as the case may be.

In District Council Vernacular Middle and Primary schools, the fees collected are levied for the benefit of the school, and may be spent, with the approval of the Committee, on school repairs, furniture, prizes, contingencies, &c. Such portion of the monthly collection of fees in these schools as may not be spent shall be made over by the Head Master to a member of the School Committee, for safe custody.

Accounts of fees to be kept.

18. The Head Master of every Government or Board Middle or Primary school shall at the end of each month, note the amount of fees collected from each boy, in the register of attendance opposite each boy's name in the column provided for the purpose, and shall keep an account of the monthly receipts and expenditure, which shall be countersigned by two members of the School Committee.

(2) *Middle and Primary Departments of Aided High and Middle Schools and Aided Primary schools.*

Fees in aided Anglo-Vernacular Middle Departments and Vernacular Middle schools.

19. The minimum rates of fees in the Middle and Primary Departments of aided High Schools and Anglo-Vernacular Middle schools, shall be as follows:—

Middle Department, annas 8.
Upper Primary Department, annas 6.
Lower Primary Department, annas 2.

Fees in aided Vernacular Middle schools and their Departments.

20. The minimum rates of fees in aided Vernacular Middle schools and their Departments shall be as follows:—

Middle Department, annas 6.
Upper Primary Department, annas 4.
Lower Primary Deparement, annas 2.

Fees in aided Primary schools.

21. In aided Primary schools not connected with schools of higher grade, the levy of fees is left to the discretion of the Manager.

Free scholars in aided schools.

22. In the Middle Departments of High and Middle schools not more than 15 per cent, and in the Primary Departments not more than 20 per cent, of the number enrolled may be admitted as free scholars, on the score of poverty: provided that no boy can be admitted as a free scholar, the annual income of whose parents or guardians exceeds Rs. 75.

C.—General.

Fees payable by all scholars not specially exempted.

23. Fees are payable in respect of every scholar attending a College or school, whatever the occupation of his father or guardian may be, unless he is specially exempted under the above rules.

Extra fee on re-admittance.

24. An extra fee equal to the fee chargeable under these rules for one month shall be paid in respect of every scholar who rejoins a Government or Board College or school after his name has been struck off the register.

Fees for younger sons in certain cases.

25. In the schools referred to in Rules 10 and 11, parents and guardians of scholars *belonging to the 1st grade* are required to pay one half fees only for younger sons, full fees being paid for the eldest son.

Special rates for scholars in backward localities &c, and for girls' schools.

26. Special rates of fees for scholars in backward localities, for schools for aboriginal races or for low castes, and for girls' schools, may be fixed by the Inspector-General of Education.

Appendix. H.

Work of Deputy and Joint Inspectors of Schools in the Central Provinces for the official year 1890-91.

District.	Name of Deputy Inspector.	Salary.	Number of days on tour.	Number of days at Head-quarters.	Area of District in square miles.	Miles travelled by Road.	Miles travelled by Rail.	Number of inspections.	Remarks.
	Southern Circle.								
Nagpur ...	Mr. Hari Shridhar Bhawe ...	200 0 0	193	110	3,786	1,275	808	199	
	„ Raghunath Ganesh, B. A. ...	80 0 0	53	9		377	60	43	
Chanda ...	„ Govind Raghunath ...	150 0 0	252	113	10,785	1,733	1,160	151	
Sironcha ..	„ C. D. Rangabhashiam ...	*50 0 0	55	310	...	686	...	48	* Yearly allowance.
Balaghat ...	„ Rahmat Ali ...	125 0 0	251	114	3,145	1,805	1,330	186	
Bhandara ...	„ Gopal Sitaram ...	80 0 0	265	100	3,922	1,708	1,583	259	
Wardha ...	„ Jageshwar Bapuji ...	80 0 0	213	106	2,401	1,317	1,718	136	
	„ Sheoram Dadaji ...	40 0 0	28	2		232	120		
tul ...	„ Kedarnath ...	150 0 0	195	85	3,905	1,741	153	134	
	„ Ravi Shankar ...	76 3 2	43	38		285	...	31	
lwara ...	„ Govind Ramchandra ...	80 0 0	250	115	3,915	1,596	1,168	130	
...	„ Jeorakhan Lal ...	100 0 0	281	84	3,247	3,623	...	253	

		Northern Circle.								
gor ...	Mr. Ganga Singh	..	150	113	48	4,005	495	832	171	
	„ Raghunath Ganesh, B. A.	..	80	77	53		476	132		
	„ Hira Lal, B. A.	...	80	51	23		490	115		
Narsinghpur ...	„ Nago Yado Rao	...	125	238	117	1,916	1,282	1,139	190	
Hoshangabad ...	„ Kripa Shankar	...	125	74	70	4,692	314	831	189	
	„ Gadadhar Prasad Singh	...	100	132	86		791	901		
Nimar ...	„ Sadasheo Vithal	..	125	254	111	3,340	1,262	2,510	165	
Mandla ..	„ Lal Mahomed	...	80	262	96	4,719	1,694	...	79	
Jubbulpore ...	„ Kripa Shankar	...	200	202	163	3,918	1,444	921	185	
Damoh ...	„ Behari Lal	..	100	245	120	2,799	2,052	...	215	
		Eastern Circle.								
Raipur ...	Mr. Jaidev Rao	..	100	225	135	14,583	2,394	142	212	
	„ Ganpat Lal	...	60	106	28		158	1,882	26	
	„ Jailal	...	52	183	48		1,310	297	219	
Bilaspur ...	„ Gadadhar Prasad Singh	...	100	86	50	7,798	416	1,906	55	
	„ Ganpat Lal	..	80	137	92		1,097	364	111	
Sambalpur ...	„ Trilochan Misra	..	80	239	126	...	1,698	1,844	299	
	„ Ramchandra Behra	...	70	180	185	7,460	1,094	...	106	
	„ Balankishore Pani	...	70	242	123	3,654	1,487	42	109	